FORCE®
CHAIN

www.eginlioglu.com.tr

SIYAH & BEYAZ
fotoğraf | video | prodüksiyon
www.siyahbeyazpro.com

FORCE®

CHAIN

EGINLIOGLU group

FORCE
CHAIN

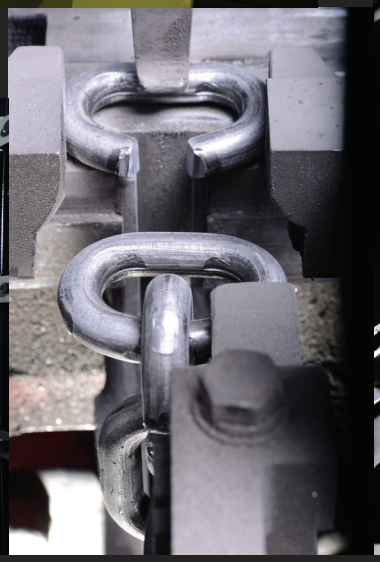

EGINLIOGLU group

EGINLIOGLU
group

EGINLIOGLU
group

Our company, “ Eğinlioğlu Zincir Sanayi ve Ticaret “ was established at the begining of 1940’s by Mithat Eğinlioğlu. This was the first industrial movement to produce steel link chain in Turkey and also the first entrepreneurship for production in our city Balıkesir. More than 70 years manufacturing experience in steel link chain production, experienced stuff and engineers, latest technology production lines and heat treatment systems, R&D department makes us one of the leading chain producer in Europe.

“ Eğinlioğlu Zincir Sanayi ve Ticaret ” and “ Oğullar Metal Sanayi Ticaret Ltd. Şti. ” are two members of Eginlioglu Group and “ Force Chain ” is our registered and official trade mark.

Eğinlioğlu makes production in its own new plant, specially designed just for steel chain production. Eginlioglu Group exports % 95 of 9000 tons/year production on 4 Continents and more than 35 Countries with own trade mark “ Force Chain ”.

FORCE
CHAIN

Our production range is from 2 mm wire diameter to 16 mm wire diameter for round and D profiles. Grade 100, Grade 80, Grade 70, Grade 50, Grade 43 and Grade 30 steel and stainless steel chains are our main quality classes. Lifting, Lashing, Fishing, Marine, Agriculture, Bucket Elevator and Scraper Conveyor Systems, Traction equipments for snow and forestry and DIY are our main markets.

Eğinlioğlu has integrated production ability to create sustainable quality with calibration and testing systems, heat treatment, continuous and bundle electro-galvanizing systems, hot-dip galvanizing, electrostatic powder coating, continuous and bundle sand blasting, platic injections and fully equiped latest technology machine and parts production department.

EGINLIOGLU group

Eğinlioğlu Family’s mission is to manage company’s big portfolio and increasing production in globalized world without losing its loyalty to the traditions and with hard tie to socail responsibilities.

EGINLIOGLU group

Eğinlioğlu ’s aim is to create permanent superiority by being different in its sector.

EGINLIOGLU
group

EGINLIOGLU
group

Technical Specifications

ALLOY STEEL

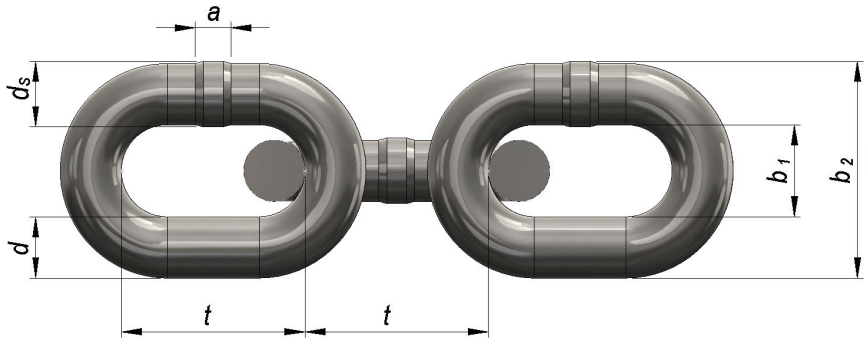

Force Chain	Wire Diameter		Inner Length		Inside Width	Outside Width	Approximate
Articel No.	Ø (d_n)	Tolerance	t	Tolerance	b_1 min.	b_2 max.	Kg / Mtr
FC.G10.R.04.P	4	± 0,16	12	± 0,4	5,2	14,8	0,36
FC.G10.R.05.P	5	± 0,20	15	± 0,5	6,5	18,5	0,56
FC.G10.R.06.P	6	± 0,24	18	± 0,5	7,8	22,2	0,80
FC.G10.R.07.P	7	± 0,28	21	± 0,6	9,1	25,9	1,10
FC.G10.R.08.P	8	± 0,32	24	± 0,7	10,4	29,6	1,50
FC.G10.R.10.P	10	± 0,40	30	± 0,9	13,0	37,0	2,30
FC.G10.R.13.P	13	± 0,52	39	± 1,2	16,9	48,1	3,90
FC.G10.R.16.P	16	± 0,64	48	± 1,4	20,8	59,2	5,80

Maksimum Weld Diameter (mm)	(d_s) max.	1.1 x d_n
Inner Length (mm)	(t_n)	3 x d_n
Minimum Inner Length (mm)	(t_{min})	2,91 x d_n
Maximum Inner Length (mm)	(t_{max})	3,09 x d_n
Minimum Inside Width (mm)	b_1	1,3 x d_n
Maximum Outside Width (mm)	b_2	3,7 x d_n

Security Level	1 / 2,5 / 4,0
Working Load Limit (WLL)	250 N/mm²
Manufacture Test Force (MTF)	625 N/mm²
Breaking Load Limit (BLL)	1000 N/mm²

Elongation without Surface Application	min. % 25
Elongation with Surface Application	min. % 20

Wire Diameter Ø (dn) mm	Working Load Limit WLL (t)	Test Force MTF (kN)	Breaking Load BLL (kN) min.	Bending Test *f* (mm) min.
4	0,63	15,7	25,1	3,2
5	1,00	24,5	39,3	4,0
6	1,40	35,3	56,5	4,8
7	1,90	48,1	77,0	5,6
8	2,50	62,8	101,0	6,4
10	4,00	98,1	157,0	8,0
13	6,70	166,0	265,0	10,0
16	10,00	251,0	402,0	13,0

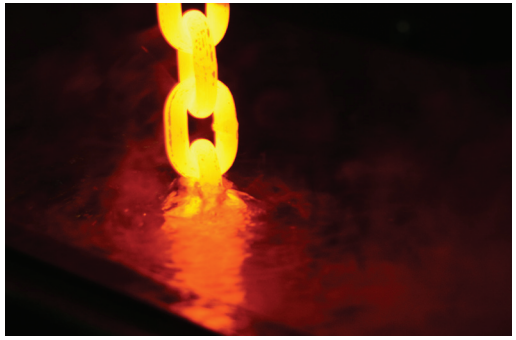

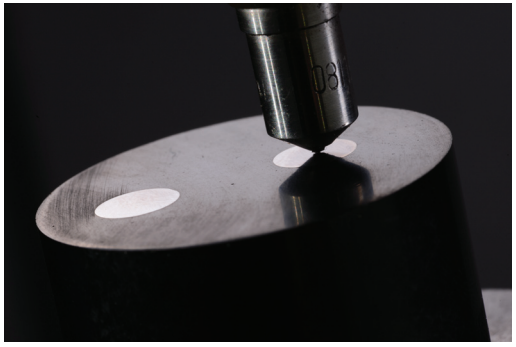

Technical Specifications

ALLOY STEEL

Clevis Sling Hook

Force Chain	G100 Chain Diameter		
Articel No.	Ø (d_n) mm	Ø (d_n) Inch	WLL (t)
FC.CSH.FRG.G10.08.P	8	5/16	2,59
FC.CSH.FRG.G10.10.P	10	3/8	4,00
FC.CSH.FRG.G10.13.P	13	1/2	6,80
FC.CSH.FRG.G10.16.P	16	5/8	10,25

Clevis Grap Hook

Force Chain	G100 Chain Diameter		
Articel No.	Ø (d_n) mm	Ø (d_n) Inch	WLL (t)
FC.CGH.FRG.G10.08.P	8	5/16	2,59
FC.CGH.FRG.G10.10.P	10	3/8	4,00
FC.CGH.FRG.G10.13.P	13	1/2	6,80
FC.CGH.FRG.G10.16.P	16	5/8	10,25

Clevis Cradle Grap Hook

Force Chain	G100 Chain Diameter		
Articel No.	Ø (d_n) mm	Ø (d_n) Inch	WLL (t)
FC.CCGH.FRG.G10.08.P	8	5/16	2,59
FC.CCGH.FRG.G10.10.P	10	3/8	4,00
FC.CCGH.FRG.G10.13.P	13	1/2	6,80
FC.CCGH.FRG.G10.16.P	16	5/8	10,25

Clevis Chocker Hook

Force Chain	G100 Chain Diameter		
Articel No.	Ø (d_n) mm	Ø (d_n) Inch	WLL (t)
FC.CGH.FRG.G10.08.P	8	5/16	3,00

Technical Specifications

ALLOY STEEL

Connecting Link

Force Chain	G100 Chain Diameter		
Articel No.	Ø (d_n) mm	Ø (d_n) Inch	WLL (t)
FC.CL.FRG.G10.08.P	8	5/16	2,59
FC.CL.FRG.G10.10.P	10	3/8	4,00
FC.CL.FRG.G10.13.P	13	1/2	6,80
FC.CL.FRG.G10.16.P	16	5/8	10,25

Omega Shackle

Force Chain	G100 Chain Diameter		
Articel No.	Ø (d_n) mm	Ø (d_n) Inch	WLL (t)
FC.OS.FRG.G10.08.P	8	5/16	2,59
FC.OS.FRG.G10.10.P	10	3/8	4,00
FC.OS.FRG.G10.13.P	13	1/2	6,80
FC.OS.FRG.G10.16.P	16	5/8	10,25


FORCE
CHAIN
WARNING
MADE IN
TURKEY
FORCE
CHAIN

Technical Specifications

ALLOY STEEL

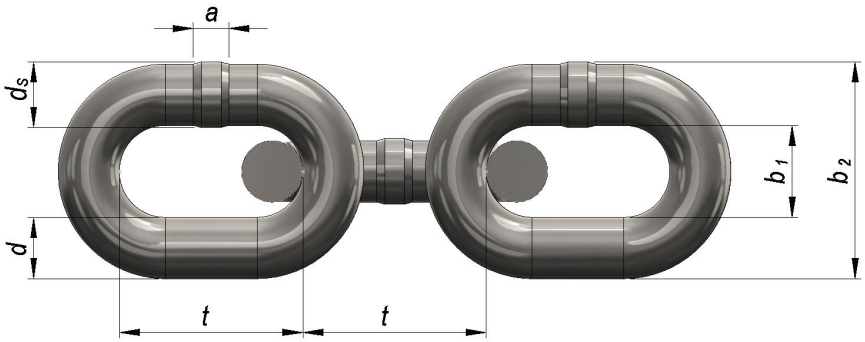

Force Chain	Wire Diameter		Inner Length		Inside Width	Outside Width	Approximate
Articel No.	Ø (d_n)	Tolerance	t	Tolerance	b_1 min.	b_2 max.	Kg / Mtr
FC.G8.R.04.P	4	± 0,16	12	± 0,4	5,2	14,8	0,35
FC.G8.R.05.P	5	± 0,20	15	± 0,5	6,5	18,5	0,50
FC.G8.R.06.P	6	± 0,24	18	± 0,5	7,8	22,2	0,80
FC.G8.R.07.P	7	± 0,28	21	± 0,6	9,1	25,9	1,10
FC.G8.R.08.P	8	± 0,32	24	± 0,7	10,4	29,6	1,40
FC.G8.R.10.P	10	± 0,40	30	± 0,9	13,0	37,0	2,20
FC.G8.R.13.P	13	± 0,52	39	± 1,2	16,9	48,1	3,80
FC.G8.R.16.P	16	± 0,64	48	± 1,4	20,8	59,2	5,70

Maksimum Weld Diameter (mm)	(d_s) max.	1.1 x d_n
Inner Length (mm)	(t_n)	3 x d_n
Minimum Inner Length (mm)	(t_{min})	2,91 x d_n
Maximum Inner Length (mm)	(t_{max})	3,09 x d_n
Minimum Inside Width (mm)	b_1	1,3 x d_n
Maximum Outside Width (mm)	b_2	3,7 x d_n

Security Level	1 / 2,5 / 4,0
Working Load Limit (WLL)	200 N/mm²
Manufacture Test Force (MTF)	500 N/mm²
Breaking Load Limit (BLL)	800 N/mm²

Elongation at Breaking Load	min. % 20

Wire Diameter Ø (dn) mm	Working Load Limit WLL (t)	Test Force MTF (kN)	Breaking Load BLL (kN) min.	Bending Test *f* (mm) min.
4	0,50	12,6	20,1	3,2
5	0,80	19,6	31,4	4,0
6	1,12	28,3	45,2	4,8
7	1,50	38,5	61,6	5,6
8	2,00	50,3	80,4	6,4
10	3,15	78,5	126,0	8,0
13	5,30	133,0	212,0	10,0
16	8,00	201,0	322,0	13,0

Technical Specifications

ALLOY STEEL

Clevis Sling Hook DIN EN 1677-2

Force Chain	G80 Chain Diameter		
Articel No.	Ø (d_n) mm	Ø (d_n) Inch	WLL (t)
FC.CSH.FRG.G08.08.P	8	5/16	2,00
FC.CSH.FRG.G08.10.P	10	3/8	3,15
FC.CSH.FRG.G08.13.P	13	1/2	5,30
FC.CSH.FRG.G08.16.P	16	5/8	8,00

Clevis Grap Hook DIN EN 1677-1

Force Chain	G80 Chain Diameter		
Articel No.	Ø (d_n) mm	Ø (d_n) Inch	WLL (t)
FC.CGH.FRG.G08.08.P	8	5/16	2,00
FC.CGH.FRG.G08.10.P	10	3/8	3,15
FC.CGH.FRG.G08.13.P	13	1/2	5,30
FC.CGH.FRG.G08.16.P	16	5/8	8,00

Clevis Cradle Grap Hook DIN EN 1677-2

Force Chain	G80 Chain Diameter		
Articel No.	Ø (d_n) mm	Ø (d_n) Inch	WLL (t)
FC.CCGH.FRG.G08.08.P	8	5/16	2,00
FC.CCGH.FRG.G08.10.P	10	3/8	3,15
FC.CCGH.FRG.G08.13.P	13	1/2	5,30
FC.CCGH.FRG.G08.16.P	16	5/8	8,00

Clevis Chocker Hook DIN EN 1677-1

Force Chain	G80 Chain Diameter		
Articel No.	Ø (d_n) mm	Ø (d_n) Inch	WLL (t)
FC.CCH.FRG.G08.08.P	8	5/16	2,50

Technical Specifications

ALLOY STEEL

Connecting Link DIN EN 1677-1

Force Chain	G80 Chain Diameter		
Articel No.	Ø (d_n) mm	Ø (d_n) Inch	WLL (t)
FC.CL.FRG.G08.08.P	8	5/16	2,00
FC.CL.FRG.G08.10.P	10	3/8	3,15
FC.CL.FRG.G08.13.P	13	1/2	5,30
FC.CL.FRG.G08.16.P	16	5/8	8,00

Omega Shackle DIN EN 1677-1

Force Chain	G80 Chain Diameter		
Articel No.	Ø (d_n) mm	Ø (d_n) Inch	WLL (t)
FC.OS.FRG.G08.08.P	8	5/16	2,00
FC.OS.FRG.G08.10.P	10	3/8	3,15
FC.OS.FRG.G08.13.P	13	1/2	5,30
FC.OS.FRG.G08.16.P	16	5/8	8,00


FORCE
Test Sonuçları
12000
1500

Technical Specifications

ALLOY STEEL

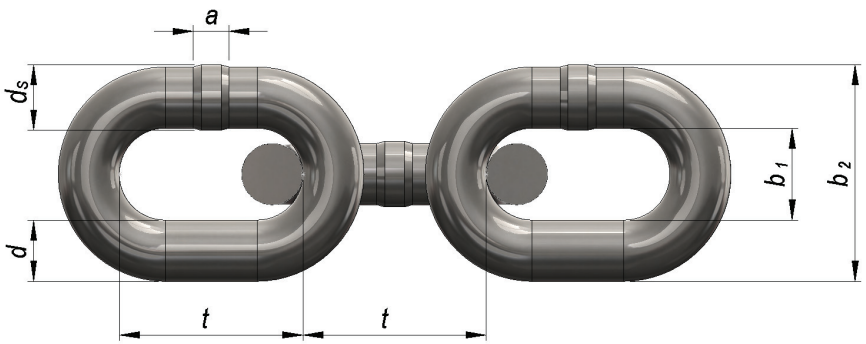

Force Chain Articel No.	Wire Diameter Ø (d_n)	Wire Diameter Tolerance	Inner Length t	Inner Length Tolerance	Inside Width b_1 min.	Outside Width b_2 max.	Inner Length 11 x t	Inner Length Tolerance		Approximate Kg / Mtr
FC.G8H.R.04.P	4	± 0,20	12	± 0,25	4,8	13,6	132,0	+ 0,40	- 0,20	0,35
FC.G8H.R.05.P	5	± 0,20	15	± 0,30	6,0	17,0	165,0	+ 0,53	- 0,27	0,54
FC.G8H.R.06.P	6	± 0,20	18	± 0,35	7,2	20,4	198,0	+ 0,66	- 0,33	0,80
FC.G8H.R.07.P	7	± 0,30	21	± 0,40	8,4	23,8	231,0	+ 0,73	- 0,37	1,10
FC.G8H.R.08.P	8	± 0,30	24	± 0,50	9,6	27,2	264,0	+ 0,86	- 0,44	1,40
FC.G8H.R.09.P	9	± 0,40	27	± 0,50	10,8	30,6	297,0	+ 0,93	- 0,47	1,80
FC.G8H.R.10.P	10	± 0,40	30	± 0,60	12,0	34,0	330,0	+ 1,06	- 0,54	2,20
FC.G8H.R.11.P	11	± 0,40	33	± 0,60	13,2	37,4	363,0	+ 1,13	- 0,57	2,70
FC.G8H.R.12.P	12	± 0,50	36	± 0,70	14,4	40,8	396,0	+ 1,26	- 0,64	3,10
FC.G8H.R.13.P	13	± 0,50	39	± 0,80	15,6	44,2	429,0	+ 1,40	- 0,70	3,70
FC.G8H.R.14.P	14	± 0,60	42	± 0,80	16,8	47,6	462,0	+ 1,46	- 0,74	4,30
FC.G8H.R.16.P	16	± 0,60	48	± 0,90	19,2	54,4	528,0	+ 1,66	- 0,84	5,60

Maksimum Weld Diameter (mm)	(d_s) max.	1,08 x d_n
Inner Length (mm)	(t_n)	2,6 x t_n < t_n < 3,2 x t_n
Minimum Inside Width (mm)	b_1	1,2 x d_n
Maximum Outside Width (mm)	b_2	3,4 x d_n

Security Level	1 / 2,5 / 4,0
Working Load Limit (WLL)	200 N/mm²
Manufacture Test Force (MTF)	500 N/mm²
Breaking Load Limit (BLL)	800 N/mm²

Bending Test f (mm) (T)	0,8 x d_n
Bending Test f (mm) (DAT)	No
Bending Test f (mm) (DT)	No

Elongation at Breaking Load (T)	min. % 10
Elongation at Breaking Load (DAT)	min. % 10
Elongation at Breaking Load (DT)	min. % 5

Minimum Surface Hardness	T	DAT	DT
d_n < 7 mm , HV 5	360	500	550
d_n = 7 mm to 11 mm, HV 10	360	500	550
d_n > 11 mm, HV 10	360	450	500

Surface Hardness Depth		
Ø (dn) mm	DAT	DT
< 8	(0,04 ± 0,01) d_n	(0,05 ± 0,01) d_n
≥ 8	(0,03 ± 0,01) d_n	(0,04 ± 0,01) d_n

Wire Diameter	Working Load Limit			Test Force	Breaking Load
Ø (dn) mm	WLL (t) T	WLL (t) DAT	WLL (t) DT	MTF (kN)	BLL (kN) min.
4	0,50	0,40	0,25	12,6	20,1
5	0,80	0,63	0,40	19,6	31,4
6	1,12	0,90	0,56	28,3	45,2
7	1,50	1,20	0,75	38,5	61,6
8	2,00	1,60	1,00	50,3	80,4
9	2,50	2,00	1,25	63,6	102,0
10	3,20	2,50	1,60	78,5	126,0
11	3,80	3,00	1,90	95,0	152,0
12	4,50	3,60	2,20	113,0	181,0
13	5,30	4,20	2,60	133,0	212,0
14	6,00	5,00	3,00	154,0	246,0
16	8,00	6,30	4,00	201,0	322,0

Technical Specifications

ALLOY STEEL

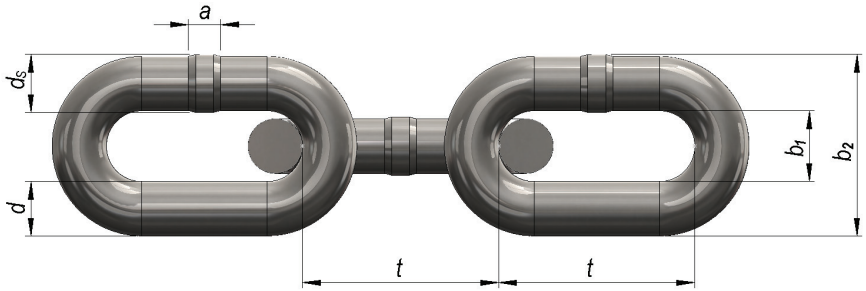

Force Chain	Wire Diameter			Inner Length		Inside Width	Outside Width		Inner Length (11 x t)		Approximate
Articel No.	Ø (d_n)	Tolerance	t	Tolerance		b_1 min.	b_2 max.	11 x t	Tolerance		Kg / Mtr
FC.22252C.DG8M.R.14.N	14	± 0,40	50	+ 0,5	- 0,5	17,0	48,0	550,0	+ 1,3	- 1,3	4,00

Wire Diameter	Working Load Limit	Test Force	Breaking Load	Bending Test
Ø (dn) mm	WLL (kN) max.	MTF (kN)	BLL (kN) min.	f (mm) min.
14,0	62,5	185,0	250,0	11,2

Security Level	1 / 3 / 4
Working Load Limit (WLL)	200 N/mm²
Manufacture Test Force (MTF)	600 N/mm²
Breaking Load Limit (BLL)	800 N/mm²

Elongation Minimum (%)	14

Technical Specifications

ALLOY STEEL

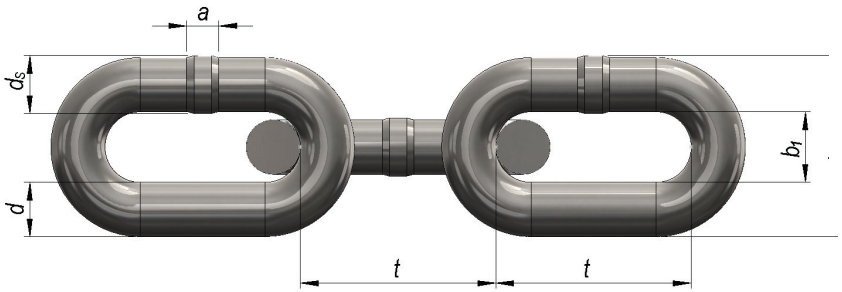

Force Chain	Wire Diameter			Inner Length		Inside Width	Outside Width		Inner Length (11 x t)		Approximate
Articel No.	Ø (d_n)	Tolerance	t	Tolerance		b_1 min.	b_2 max.	11 x t	Tolerance		Kg / Mtr
FC.22252B.DG6M.R.14.N	14	± 0,40	50	+ 0,5	- 0,5	17,0	48,0	550,0	+ 1,3	- 1,3	4,00

Wire Diameter	Working Load Limit	Test Force	Breaking Load	Bending Test
Ø (dn) mm	WLL (kN) max.	MTF (kN)	BLL (kN) min.	f (mm) min.
14,0	48,5	154,0	194,0	11,2

Security Level	1 / 3 / 4
Working Load Limit (WLL)	150 N/mm²
Manufacture Test Force (MTF)	450 N/mm²
Breaking Load Limit (BLL)	600 N/mm²

Elongation Minimum (%)	14

Technical Specifications

ALLOY STEEL

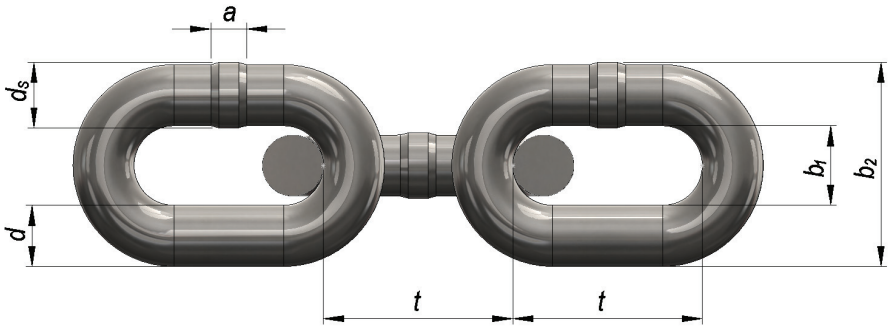

Force Chain	Wire Diameter			Inner Length		Inside Width	Outside Width	Inner Length (11 x t)			Approximate
Articel No.	Ø (d_n)	Tolerance	t	Tolerance		b_1 min.	b_2 max.	11 x t	Tolerance		Kg / Mtr
FC.32895.DG7.R.08.W	8	± 0,30	31	+ 0,5	- 0,3	10,4	28,0	341,0	+ 1,5	- 0,8	1,30
FC.32895.DG7.R.09.W	9	± 0,40	31	+ 0,5	- 0,3	11,7	31,5	341,0	+ 1,5	- 0,8	1,70
FC.32895.DG7.R.10.W	10	± 0,40	31	+ 0,5	- 0,3	12,5	34,0	341,0	+ 1,5	- 0,8	2,20
FC.32895.DG7.R.10.W	10	± 0,40	35	+ 0,6	- 0,3	12,5	34,0	385,0	+ 1,7	- 0,9	2,10
FC.32895.DG7.R.11.W	11	± 0,40	35	+ 0,6	- 0,3	13,8	37,4	385,0	+ 1,7	- 0,9	2,70
FC.32895.DG7.R.12.W	12	± 0,50	36	+ 0,6	- 0,3	15,0	40,8	396,0	+ 1,8	- 0,9	3,20
FC.32895.DG7.R.13.W	13	± 0,50	45	+ 0,8	- 0,4	16,3	44,2	495,0	+ 2,2	- 1,1	3,50

Wire Diameter	Working Load Limit	Test Force	Breaking Load	Bending Test
Ø (dn) mm	WLL (kN) max.	MTF (kN)	BLL (kN) min.	f (mm) min.
8,0	18,00	45,0	71,0	7,0
9,0	22,40	56,0	90,0	7,0
10,0	28,00	71,0	112,0	8,0
11,0	33,50	85,0	132,0	9,0
12,0	40,00	100,0	160,0	10,0
13,0	47,50	118,0	190,0	11,0

Security Level	1 / 2,5 / 4,0
Working Load Limit (WLL)	180 N/mm²
Manufacture Test Force (MTF)	450 N/mm²
Breaking Load Limit (BLL)	710 N/mm²


FORCE
FORCE
FORCE

Technical Specifications

ALLOY STEEL

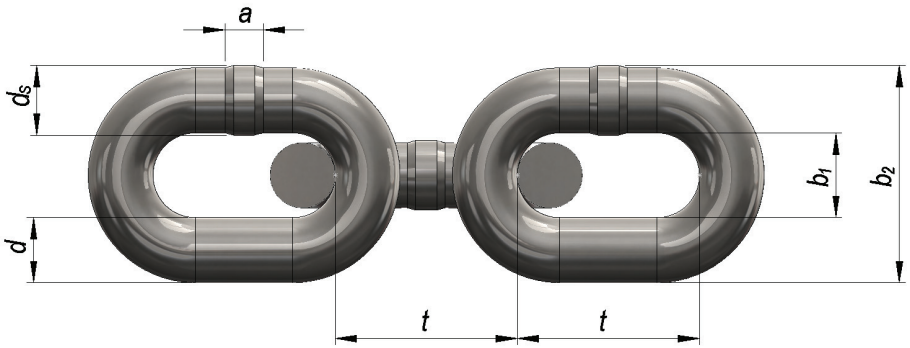

Force Chain	Wire Diameter			Inner Length		Inside Width	Outside Width	Inner Length (11 x t)			Approximate
Articel No.	Ø (d_n)	Tolerance	t	Tolerance		b_1 min.	b_2 max.	11 x t	Tolerance		Kg / Mtr
FC.5684/2.DG6.R.04.W	4	± 0,20	12	+ 0,15	- 0,1	5,0	13,7	132,0	+ 0,4	- 0,2	0,35
FC.5684/2.DG6.R.05.W	5	± 0,20	15	+ 0,2	- 0,1	6,0	16,9	165,0	+ 0,5	- 0,3	0,54
FC.5684/2.DG6.R.05.W	5	± 0,20	18,5	+ 0,25	- 0,1	6,0	16,9	203,5	+ 0,7	- 0,3	0,50
FC.5684/2.DG6.R.06.W	6	± 0,20	18	+ 0,25	- 0,1	7,2	20,2	198,0	+ 0,6	- 0,3	0,80
FC.5684/2.DG6.R.06.W	6	± 0,20	18,5	+ 0,25	- 0,1	7,2	20,2	203,5	+ 0,7	- 0,3	0,80
FC.5684/2.DG6.R.07.W	7	± 0,30	21	+ 0,3	- 0,1	8,4	23,6	231,0	+ 0,7	- 0,4	1,10
FC.5684/2.DG6.R.07.W	7	± 0,30	22	+ 0,3	- 0,15	8,4	23,6	242,0	+ 0,8	- 0,4	1,10
FC.5684/2.DG6.R.08.W	8	± 0,30	24	+ 0,3	- 0,15	9,6	27,0	264,0	+ 0,8	- 0,4	1,40
FC.5684/2.DG6.R.09.W	9	± 0,40	27	+ 0,35	- 0,2	10,8	30,4	297,0	+ 1,0	- 0,5	1,80
FC.5684/2.DG6.R.10.W	10	± 0,40	28	+ 0,35	- 0,2	12,0	34,0	308,0	+ 1,0	- 0,5	2,20
FC.5684/2.DG6.R.11.W	11	± 0,40	31	+ 0,4	- 0,2	13,2	37,4	341,0	+ 1,1	- 0,5	2,70
FC.5684/2.DG6.R.13.W	13	± 0,50	36	+ 0,45	- 0,25	15,6	44,2	396,0	+ 1,3	- 0,6	3,80
FC.5684/2.DG6.R.14.W	14	± 0,60	41	+ 0,5	- 0,3	16,8	47,6	451,0	+ 1,4	- 0,7	4,40
FC.5684/2.DG6.R.16.W	16	± 0,60	45	+ 0,6	- 0,3	19,2	54,4	495,0	+ 1,6	- 0,8	5,70

Wire Diameter	Working Load Limit		Test Force	Breaking Load	Bending Test
Ø (dn) mm	WLL (Kg) Electric Hoists	WLL (Kg) Hand Hoists	MTF (kN)	BLL (kN) min.	*f* (mm) min.
4,0	320	400	10,0	16,0	3,0
5,0	500	630	16,0	25,0	4,0
6,0	750	900	22,4	37,5	5,0
7,0	1000	1250	32,0	50,0	6,0
8,0	1250	1600	40,0	63,0	7,0
9,0	1600	2000	50,0	80,0	7,0
10,0	2000	2500	63,0	100,0	8,0
11,0	2500	3000	75,0	125,0	9,0
13,0	3200	4250	106,0	170,0	11,0
14,0	4000	5000	125,0	200,0	12,0
16,0	5000	6300	160,0	250,0	13,0

	Electric Hoists	Hand Hoists
Security Level	1 / 3,15 / 5	1 / 2,5 / 4
Working Load Limit (WLL)	125 N/mm^2	160 N/mm^2
Manufacture Test Force (MTF)	400 N/mm^2	400 N/mm^2
Breaking Load Limit (BLL)	630 N/mm^2	630 N/mm^2
Elongation at Breaking Load (Min. %)	10	10
Surface Hardness Min.	330 HV	330 HV

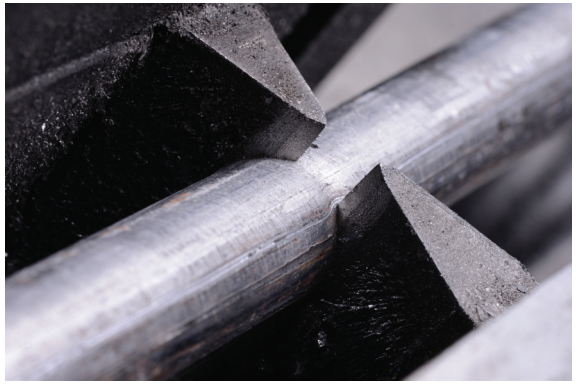

Technical Specifications

ALLOY STEEL

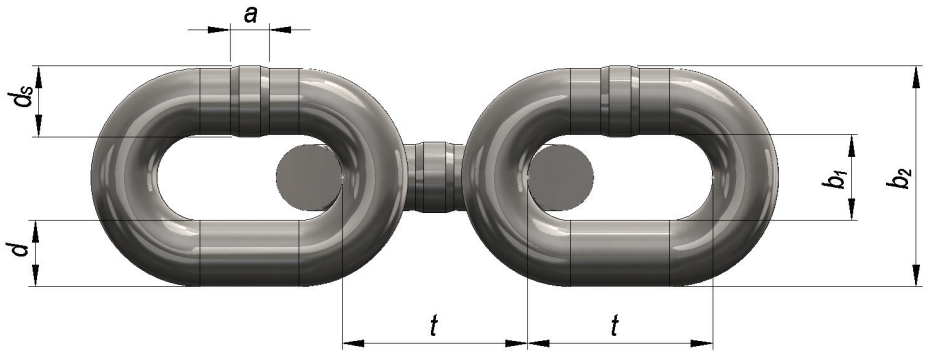

Force Chain	Wire Diameter			Inner Length		Inside Width	Outside Width	Inner Length (11 x t)			Approximate
Articel No.	Ø (d_n)	Tolerance	t	Tolerance		b_1 min.	b_2 max.	11 x t	Tolerance		Kg / Mtr
FC.5684/1.DG5.R.04.W	4	± 0,20	12	+ 0,15	- 0,1	5,0	13,7	132,0	+ 0,4	- 0,2	0,35
FC.5684/1.DG5.R.05.W	5	± 0,20	15	+ 0,2	- 0,1	6,0	16,9	165,0	+ 0,5	- 0,3	0,54
FC.5684/1.DG5.R.05.W	5	± 0,20	18,5	+ 0,25	- 0,1	6,0	16,9	203,5	+ 0,7	- 0,3	0,50
FC.5684/1.DG5.R.06.W	6	± 0,20	18	+ 0,25	- 0,1	7,2	20,2	198,0	+ 0,6	- 0,3	0,80
FC.5684/1.DG5.R.06.W	6	± 0,20	18,5	+ 0,25	- 0,1	7,2	20,2	203,5	+ 0,7	- 0,3	0,80
FC.5684/1.DG5.R.07.W	7	± 0,30	21	+ 0,3	- 0,1	8,4	23,6	231,0	+ 0,7	- 0,4	1,10
FC.5684/1.DG5.R.07.W	7	± 0,30	22	+ 0,3	- 0,15	8,4	23,6	242,0	+ 0,8	- 0,4	1,10
FC.5684/1.DG5.R.08.W	8	± 0,30	24	+ 0,3	- 0,15	9,6	27,0	264,0	+ 0,8	- 0,4	1,40
FC.5684/1.DG5.R.09.W	9	± 0,40	27	+ 0,35	- 0,2	10,8	30,4	297,0	+ 1,0	- 0,5	1,80
FC.5684/1.DG5.R.10.W	10	± 0,40	28	+ 0,35	- 0,2	12,0	34,0	308,0	+ 1,0	- 0,5	2,20
FC.5684/1.DG5.R.11.W	11	± 0,40	31	+ 0,4	- 0,2	13,2	37,4	341,0	+ 1,1	- 0,5	2,70
FC.5684/1.DG5.R.13.W	13	± 0,50	36	+ 0,45	- 0,25	15,6	44,2	396,0	+ 1,3	- 0,6	3,80
FC.5684/1.DG5.R.14.W	14	± 0,60	41	+ 0,5	- 0,3	16,8	47,6	451,0	+ 1,4	- 0,7	4,40
FC.5684/1.DG5.R.16.W	16	± 0,60	45	+ 0,6	- 0,3	19,2	54,4	495,0	+ 1,6	- 0,8	5,70

Wire Diameter	Working Load Limit		Test Force	Breaking Load
Ø (dn) mm	WLL (Kg) Electric Hoists	WLL (Kg) Hand Hoists	MTF (kN)	BLL (kN) min.
4,0	250	320	8,0	12,5
5,0	400	500	12,5	20,0
6,0	600	750	19,0	30,0
7,0	800	1000	25,0	40,0
8,0	1000	1250	32,0	50,0
9,0	1250	1600	40,0	63,0
10,0	1600	2000	50,0	80,0
11,0	2000	2500	63,0	100,0
13,0	2650	3350	85,0	132,0
14,0	3200	4000	100,0	160,0
16,0	4000	5000	125,0	200,0

	Electric Hoists	Hand Hoists
Security Level	1 / 3,15 / 5	1 / 2,5 / 4
Working Load Limit (WLL)	100 N/mm^2	125 N/mm^2
Manufacture Test Force (MTF)	315 N/mm^2	315 N/mm^2
Breaking Load Limit (BLL)	500 N/mm^2	500 N/mm^2
Elongation at Breaking Load (Min. %)	10	10
Surface Hardness Min.	330 HV	330 HV

Technical Specifications

ALLOY STEEL

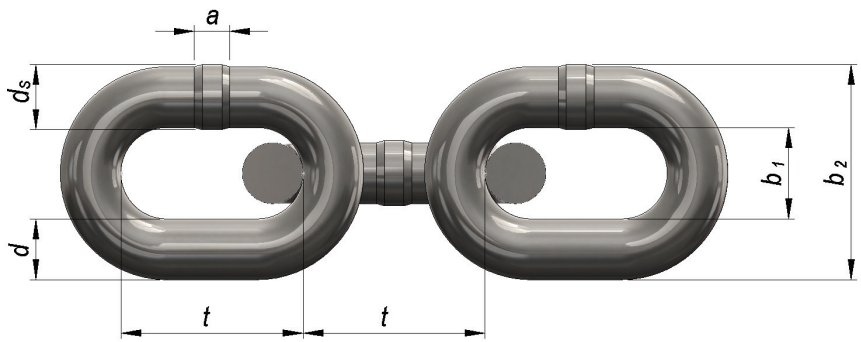

Force Chain	Wire Diameter			Inner Length		Inside Width	Outside Width	Approximate
Articel No.	Ø (d_n)	Tolerance	t	Tolerance		b_1 min.	b_2 max.	Kg / Mtr
FC.5687.DG5.R.06.W	6	± 0,20	18	+ 0,5	- 0,5	8,0	21,6	0,80
FC.5687.DG5.R.08.W	8	± 0,30	24	+ 0,7	- 0,7	10,8	28,8	1,40
FC.5687.DG5.R.10.W	10	± 0,40	30	+ 0,9	- 0,9	13,5	36,0	2,20
FC.5687.DG5.R.13.W	13	± 0,50	39	+ 1,2	- 1,2	17,5	46,8	3,80
FC.5687.DG5.R.16.W	16	± 0,60	48	+ 1,4	- 1,4	21,5	57,6	5,70

Wire Diameter Ø (dn) mm	Working Load Limit WLL (Kg)	Test Force MTF (kN)	Breaking Load BLL (kN) min.	Bending Test *f* (mm) min.
6,0	750	19,0	30,0	5,0
8,0	1250	32,0	50,0	7,0
10,0	2000	50,0	80,0	8,0
13,0	3200	80,0	125,0	11,0
16,0	5000	125,0	200,0	13,0

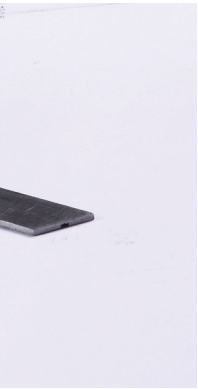

	Hand Hoists
Security Level	1 / 2,5 / 4
Working Load Limit (WLL)	125 N/mm^2
Manufacture Test Force (MTF)	315 N/mm^2
Breaking Load Limit (BLL)	500 N/mm^2
Elongation at Breaking Load (Min. %)	15

Technical Specifications

CARBON STEEL | STAINLESS STEEL

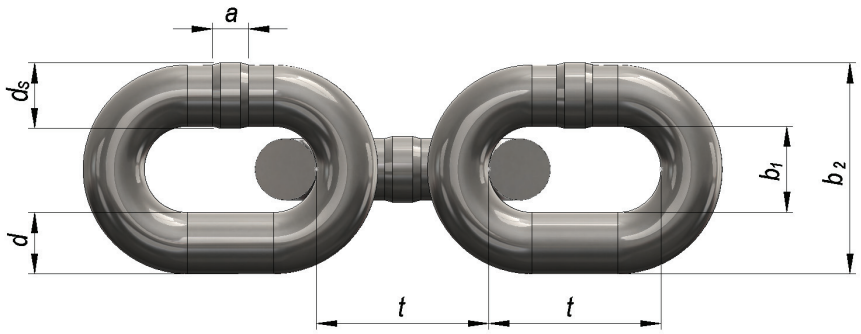

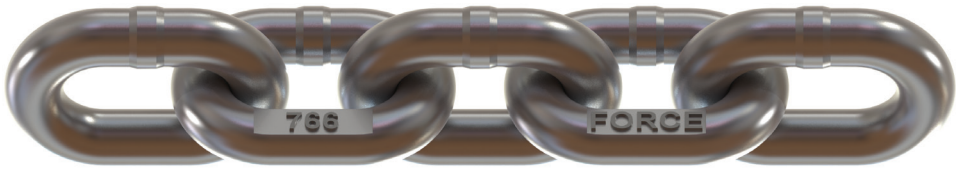

Force Chain	Wire Diameter			Inner Length		Inside Width	Outside Width	Inner Length (11 x t)			Approximate
Articel No.	Ø (d_n)	Tolerance	t	Tolerance		b_1 min.	b_2 max.	11 x t	Tolerance		Kg / Mtr
FC.766.DG3.R.04.W	4	± 0,20	16	+ 0,3	- 0,2	4,8	13,6	176,0	+ 0,8	- 0,4	0,32
FC.766.DG3.R.05.W	5	± 0,20	18,5	+ 0,4	- 0,2	6,0	17,0	203,5	+ 0,9	- 0,5	0,50
FC.766.DG3.R.06.W	6	± 0,20	18,5	+ 0,4	- 0,2	7,2	20,4	203,5	+ 0,9	- 0,5	0,80
FC.766.DG3.R.07.W	7	± 0,30	22	+ 0,4	- 0,2	8,4	23,8	242,0	+ 1,1	- 0,5	1,10
FC.766.DG3.R.08.W	8	± 0,30	24	+ 0,4	- 0,2	9,6	27,2	264,0	+ 1,2	- 0,6	1,40
FC.766.DG3.R.09.W	9	± 0,40	27	+ 0,5	- 0,3	10,8	30,6	297,0	+ 1,3	- 0,7	1,80
FC.766.DG3.R.10.W	10	± 0,40	28	+ 0,5	- 0,3	12,0	36,0	308,0	+ 1,4	- 0,7	2,30
FC.766.DG3.R.11.W	11	± 0,40	31	+ 0,5	- 0,3	13,2	40,0	341,0	+ 1,5	- 0,8	2,70
FC.766.DG3.R.13.W	13	± 0,50	36	+ 0,6	- 0,3	15,6	47,0	396,0	+ 1,7	- 0,9	3,90
FC.766.DG3.R.14.W	14	± 0,60	41	+ 0,7	- 0,4	16,8	50,0	451,0	+ 2,0	- 1,0	4,40
FC.766.DG3.R.16.W	16	± 0,60	45	+ 0,8	- 0,4	19,2	58,0	495,0	+ 2,2	- 1,1	5,80

Security Level	1 / 2,5 / 4,0
Working Load Limit (WLL)	75 N/mm²
Manufacture Test Force (MTF)	188 N/mm²
Breaking Load Limit (BLL)	300 N/mm²

Wire Diameter Ø (dn) mm	Working Load Limit WLL (Kg) max.	Test Force MTF (kN)	Breaking Load BLL (kN) min.	Bending Test *f* (mm) min.
4,0	200	5,0	8,0	3,0
5,0	320	8,0	12,5	4,0
6,0	400	10,0	16,0	5,0
7,0	630	16,0	25,0	6,0
8,0	800	20,0	32,0	7,0
9,0	1000	25,0	40,0	7,0
10,0	1250	32,0	50,0	8,0
11,0	1600	40,0	63,0	9,0
13,0	2000	50,0	80,0	11,0
14,0	2500	63,0	100,0	12,0
16,0	3200	80,0	125,0	13,0

Technical Specifications

CARBON STEEL STAINLESS STEEL

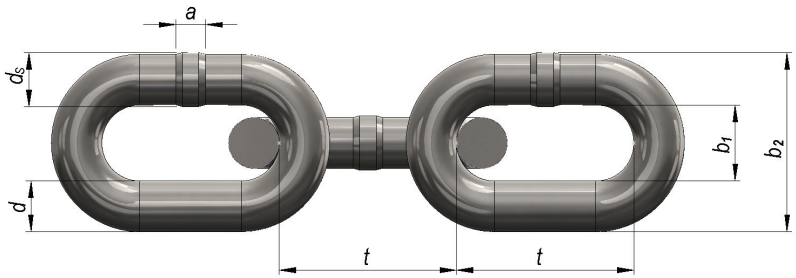

Force Chain	Wire Diameter			Inner Length		Inside Width	Outside Width	Inner Length (11 x t)			Approximate
Articel No.	Ø (d_n)	Tolerance	t	Tolerance		b_1 min.	b_2 max.	11 x t	Tolerance		Kg / Mtr
FC.764.DG3.R.10.W	10	± 0,40	35	+ 0,6	- 0,3	14,0	36,0	385,0	+ 1,7	- 0,9	2,00
FC.764.DG3.R.13.W	13	± 0,50	45	+ 0,7	- 0,4	18,0	47,0	495,0	+ 2,2	- 1,1	3,50
FC.764.DG3.R.16.W	16	± 0,60	56	+ 0,9	- 0,5	22,0	58,0	616,0	+ 2,8	- 1,4	5,20

Wire Diameter Ø (dn) mm	Working Load Limit WLL (kN) max.	Test Force MTF (kN)	Breaking Load BLL (kN) min.	Bending Test f (mm) min.
10	12,5	32,0	50,0	10,0
13	21,2	53,0	85,0	13,0
16	32,0	80,0	125,0	16,0

Security Level	1 / 2,5 / 4,0
Working Load Limit (WLL)	75 N/mm²
Manufacture Test Force (MTF)	188 N/mm²
Breaking Load Limit (BLL)	300 N/mm²

Technical Specifications

CARBON STEEL | STAINLESS STEEL

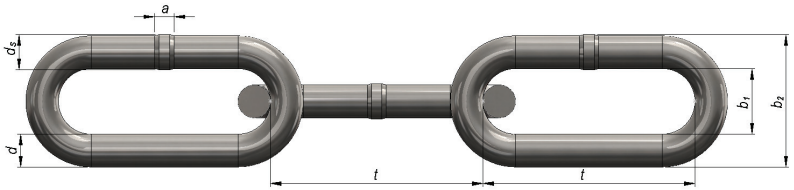

Force Chain	Wire Diameter			Inner Length		Inside Width	Outside Width	Approximate
Articel No.	Ø (d_n)	Tolerance	t	Tolerance		b_1 min.	b_2 max.	Kg / Mtr
FC.763.DG3.R.04.W	4	± 0,20	32	+ 1,0	- 1,0	7,2	16,8	0,27
FC.763.DG3.R.05.W	5	± 0,25	35	+ 1,1	- 1,1	9,0	21,0	0,43
FC.763.DG3.R.06.W	6	± 0,30	42	+ 1,3	- 1,3	10,8	25,2	0,63
FC.763.DG3.R.07.W	7	± 0,35	49	+ 1,5	- 1,5	12,6	29,4	0,86
FC.763.DG3.R.08.W	8	± 0,40	52	+ 1,6	- 1,6	14,4	33,6	1,10
FC.763.DG3.R.10.W	10	± 0,50	65	+ 2,0	- 2,0	18,0	42,0	1,75
FC.763.DG3.R.13.W	13	± 0,65	82	+ 2,5	- 2,5	23,4	54,6	2,95
FC.763.DG3.R.16.W	16	± 0,80	100	+ 3,0	- 3,0	28,8	67,2	4,45

Wire Diameter	Working Load Limit	Test Force	Breaking Load
Ø (dn) mm	WLL (Kg) max.	MTF (kN)	BLL (kN) min.
4,0	100	5,0	8,0
5,0	160	8,0	12,5
6,0	200	10,0	16,0
7,0	300	16,0	25,0
8,0	400	20,0	32,0
10,0	630	32,0	50,0
13,0	1000	50,0	80,0
16,0	1600	80,0	125,0

Security Level	1 / 2,5 / 6
Working Load Limit (WLL)	50 N/mm²
Manufacture Test Force (MTF)	125 N/mm²
Breaking Load Limit (BLL)	300 N/mm²

Technical Specifications

CARBON STEEL | STAINLESS STEEL

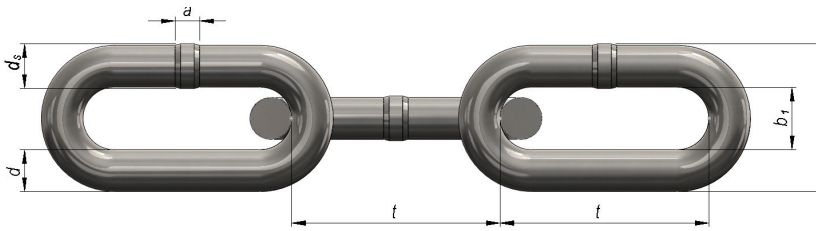

Force Chain	Wire Diameter			Inner Length		Inside Width	Outside Width	Inner Length (11 x *t*)			Approximate
Articel No.	Ø (d_n)	Tolerance	*t*	Tolerance		b_1 min.	b_2 max.	11 x *t*	Tolerance		Kg / Mtr
FC.762.DG3.R.10.W	10	± 0,40	50	+ 0,8	- 0,4	14,0	36,0	550,0	+ 3,9	- 2,2	1,80
FC.762.DG3.R.13.W	13	± 0,50	65	+ 1,0	- 0,5	18,2	46,8	715,0	+ 5,0	- 2,9	3,10
FC.762.DG3.R.16.W	16	± 0,60	80	+ 1,3	- 0,6	22,4	57,6	880,0	+ 6,2	- 3,5	4,70

Wire Diameter	Working Load Limit	Test Force	Breaking Load	Bending Test
Ø (dn) mm	WLL (kN) max.	MTF (kN)	BLL (kN) min.	*f* (mm) min.
10	10,0	25,0	50,0	10,0
13	16,0	40,0	80,0	13,0
16	25,0	63,0	125,0	16,0

Security Level	1 / 2,5 / 5,0
Working Load Limit (WLL)	60 N/mm²
Manufacture Test Force (MTF)	150 N/mm²
Breaking Load Limit (BLL)	300 N/mm²


FORCE
CHAIN
35
FORCE
CHAIN

Technical Specifications

CARBON STEEL STAINLESS STEEL

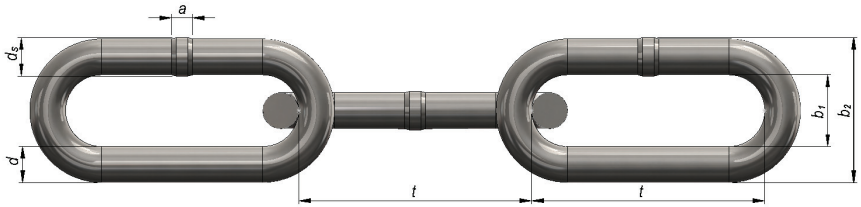

Force Chain	Wire Diameter		Inner Length			Inside Width	Approximate	Working Load Limit
Articel No.	Ø (d_n)	Tolerance	t	Tolerance		b_1 min.	Kg / Mtr	WLL (Kg) max.
FC.5685/1.DG3.R.02.W	2	± 0,10	22	+ 1,1	- 1,1	3,5	0,06	20
FC.5685/1.DG3.R.025.W	2,5	± 0,10	24	+ 1,2	- 1,2	4,5	0,10	30
FC.5685/1.DG3.R.03.W	3	± 0,20	26	+ 1,3	- 1,3	5,5	0,14	40
FC.5685/1.DG3.R.035.W	3,5	± 0,20	28	+ 1,4	- 1,4	6,0	0,20	60
FC.5685/1.DG3.R.04.W	4	± 0,20	32	+ 1,6	- 1,6	7,0	0,26	80
FC.5685/1.DG3.R.05.W	5	± 0,30	35	+ 1,8	- 1,8	9,0	0,42	125
FC.5685/1.DG3.R.06.W	6	± 0,30	42	+ 2,1	- 2,1	11,0	0,61	160
FC.5685/1.DG3.R.07.W	7	± 0,40	49	+ 2,5	- 2,5	12,0	0,82	220
FC.5685/1.DG3.R.08.W	8	± 0,40	52	+ 2,6	- 2,6	14,0	1,10	320
FC.5685/1.DG3.R.10.W	10	± 0,50	65	+ 3,3	- 3,3	18,0	1,70	500
FC.5685/1.DG3.R.13.W	13	± 0,70	82	+ 4,1	- 4,1	23,0	2,90	800

Technical Specifications

CARBON STEEL STAINLESS STEEL

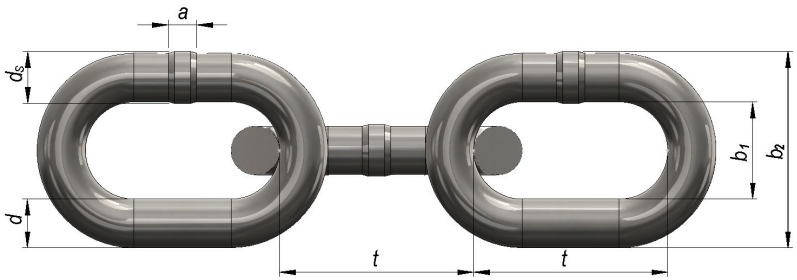

Force Chain	Wire Diameter			Inner Length		Inside Width	Approximate	Working Load Limit
Articel No.	Ø (d_n)	Tolerance	t	Tolerance		b_1 min.	Kg / Mtr	WLL (Kg) max.
FC.5685/2.DG3.R.02.W	2	± 0,10	12	+ 0,6	- 0,6	3,5	0,07	20
FC.5685/2.DG3.R.025.W	2,5	± 0,10	14	+ 0,7	- 0,7	4,5	0,11	30
FC.5685/2.DG3.R.03.W	3	± 0,20	16	+ 0,8	- 0,8	5,5	0,17	40
FC.5685/2.DG3.R.035.W	3,5	± 0,20	18	+ 0,9	- 0,9	6,0	0,23	60
FC.5685/2.DG3.R.04.W	4	± 0,20	19	+ 1,0	- 1,0	7,0	0,30	80
FC.5685/2.DG3.R.05.W	5	± 0,30	21	+ 1,1	- 1,1	9,0	0,50	125
FC.5685/2.DG3.R.06.W	6	± 0,30	24	+ 1,2	- 1,2	11,0	0,73	160
FC.5685/2.DG3.R.07.W	7	± 0,40	28	+ 1,4	- 1,4	12,0	0,99	220
FC.5685/2.DG3.R.08.W	8	± 0,40	32	+ 1,6	- 1,6	14,0	1,30	320
FC.5685/2.DG3.R.10.W	10	± 0,50	40	+ 2,0	- 2,0	18,0	2,00	500
FC.5685/2.DG3.R.13.W	13	± 0,70	52	+ 2,6	- 2,6	23,0	3,40	800

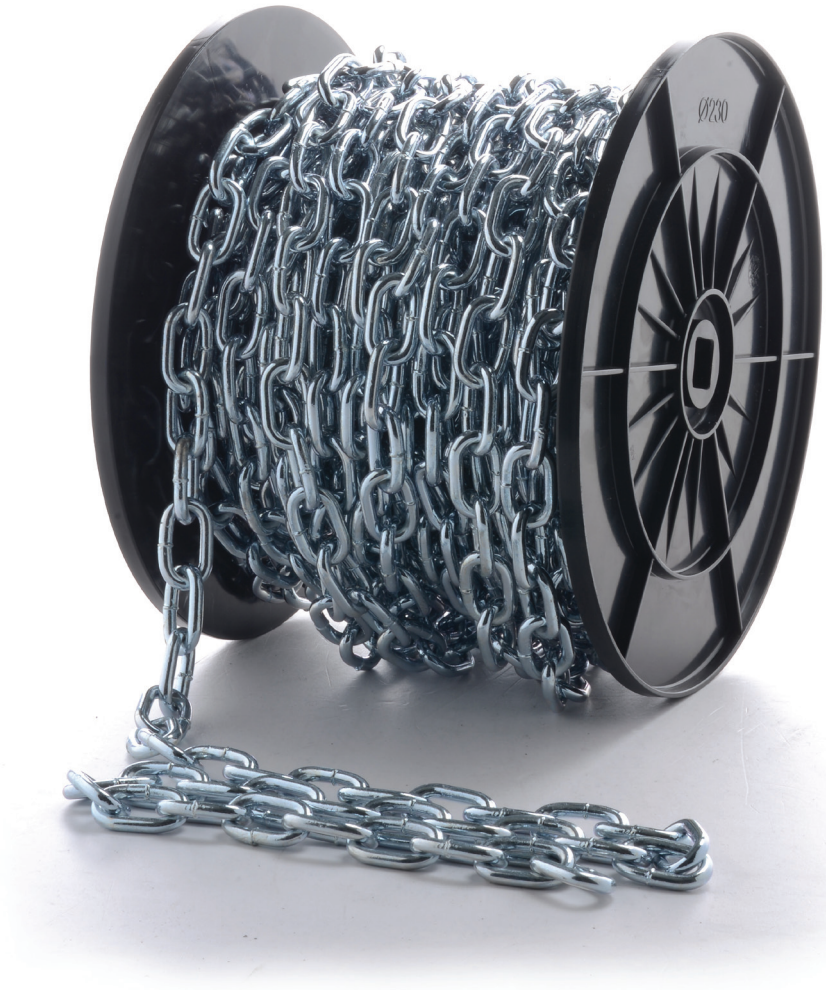
Ø230

Technical Specifications

CARBON STEEL STAINLESS STEEL

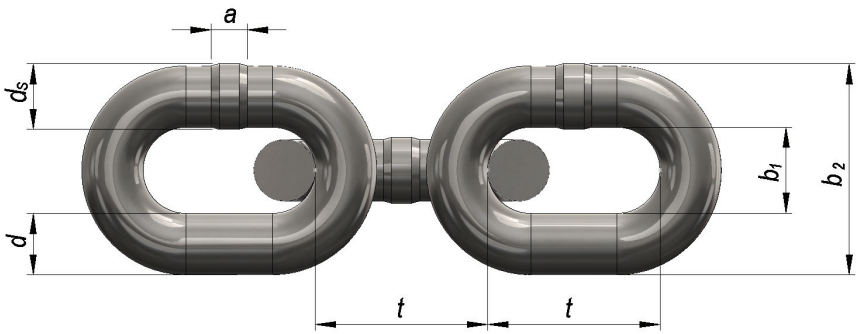

Force Chain	Wire Diameter			Inner Length		Inside Width	Approximate	Working Load Limit
Articel No.	Ø (d_n)	Tolerance	t	Tolerance		b_1 min.	Kg / Mtr	WLL (Kg) max.
FC.5685/3.DG3.R.04.W	4	± 0,20	16	+ 0,8	- 0,8	5,5	0,31	80
FC.5685/3.DG3.R.05.W	5	± 0,30	18,5	+ 0,9	- 0,9	7,0	0,51	125
FC.5685/3.DG3.R.06.W	6	± 0,30	18,5	+ 0,9	- 0,9	8,0	0,78	160
FC.5685/3.DG3.R.07.W	7	± 0,40	22	+ 1,1	- 1,1	9,5	1,10	220
FC.5685/3.DG3.R.08.W	8	± 0,40	24	+ 1,2	- 1,2	11,0	1,40	320
FC.5685/3.DG3.R.10.W	10	± 0,50	28	+ 1,4	- 1,4	14,0	2,30	500
FC.5685/3.DG3.R.13.W	13	± 0,70	36	+ 1,8	- 1,8	18,0	3,90	800
FC.5685/3.DG3.R.16.W	16	± 0,80	45	+ 2,3	- 2,3	22,0	5,80	1250

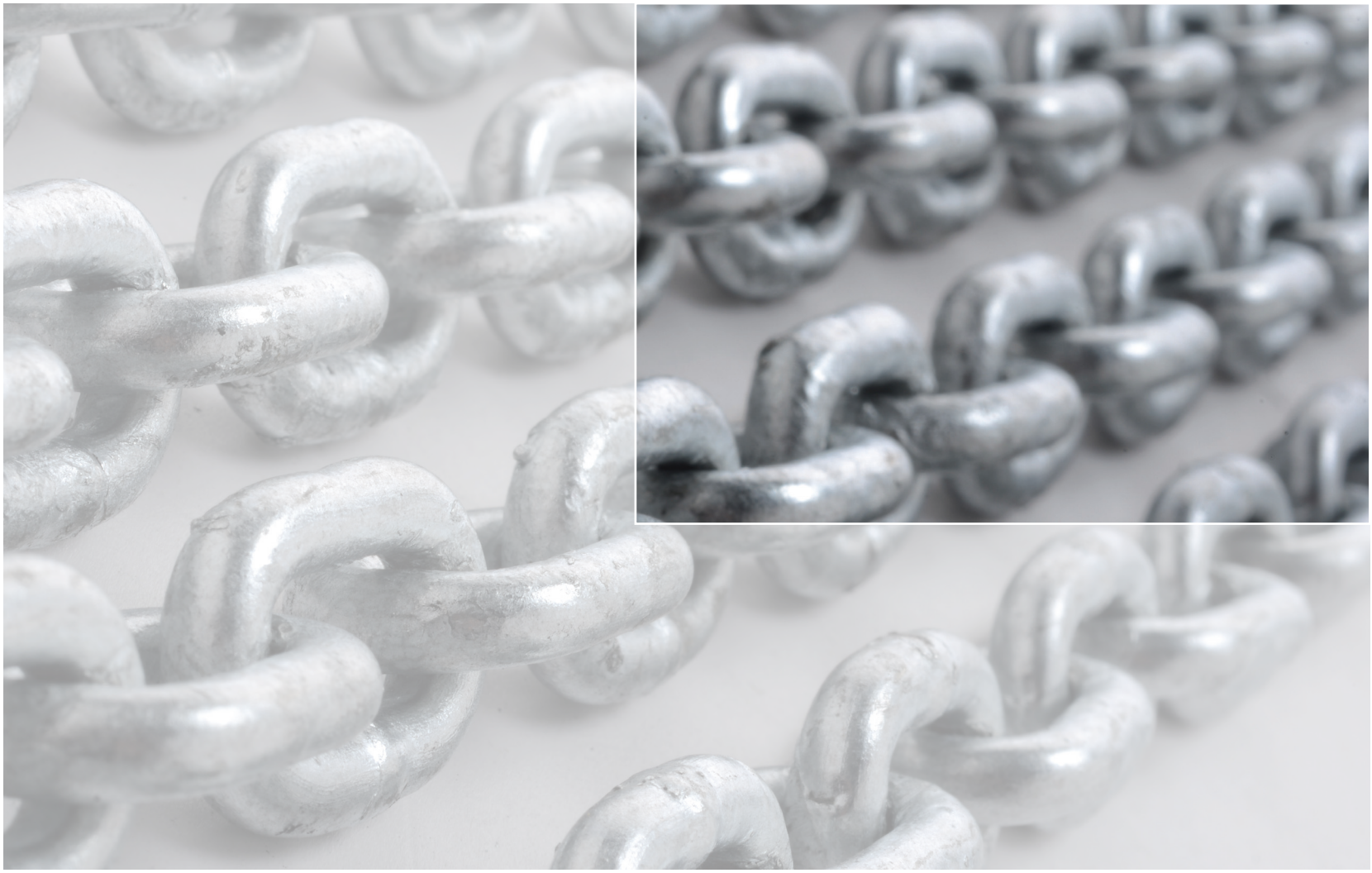

Technical Specifications

CARBON STEEL

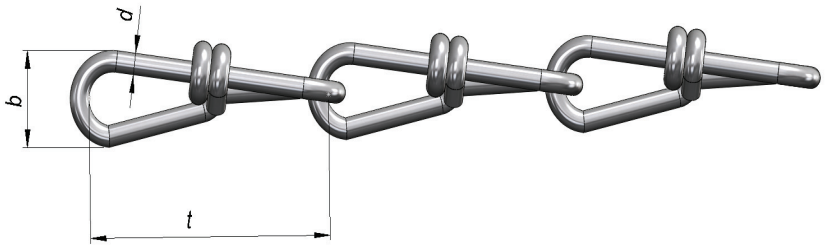

Force Chain	Wire Diameter			Inner Length		Inside Width	Approximate
Articel No.	Ø (d_n)	Tolerance	t	Tolerance		b_1 min.	Kg / Mtr
FC.5686.D.R.01.W	1	± 0,10	14	+ 1,0	- 1,0	4,5	0,02
FC.5686.D.R.012.W	1,2	± 0,10	17	+ 1,0	- 1,0	5,5	0,03
FC.5686.D.R.014.W	1,4	± 0,10	20	+ 1,0	- 1,0	6,5	0,04
FC.5686.D.R.016.W	1,6	± 0,10	22	+ 2,0	- 2,0	7,0	0,05
FC.5686.D.R.018.W	1,8	± 0,10	25	+ 2,0	- 2,0	8,0	0,07
FC.5686.D.R.02.W	2	± 0,10	28	+ 2,0	- 2,0	9,0	0,08
FC.5686.D.R.022.W	2,2	± 0,10	31	+ 2,0	- 2,0	10,0	0,10
FC.5686.D.R.025.W	2,5	± 0,10	35	+ 2,0	- 2,0	11,0	0,14
FC.5686.D.R.028.W	2,8	± 0,10	39	+ 3,0	- 3,0	13,0	0,16
FC.5686.D.R.031.W	3,1	± 0,20	40	+ 3,0	- 3,0	14,0	0,20
FC.5686.D.R.034.W	3,4	± 0,20	44	+ 3,0	- 3,0	15,0	0,25
FC.5686.D.R.038.W	3,8	± 0,20	46	+ 3,0	- 3,0	17,0	0,32
FC.5686.D.R.042.W	4,2	± 0,20	50	+ 4,0	- 4,0	19,0	0,40
FC.5686.D.R.046.W	4,6	± 0,20	55	+ 4,0	- 4,0	21,0	0,46
FC.5686.D.R.05.W	5	± 0,30	60	+ 4,0	- 4,0	23,0	0,53
FC.5686.D.R.055.W	5,5	± 0,30	66	+ 5,0	- 5,0	25,0	0,65

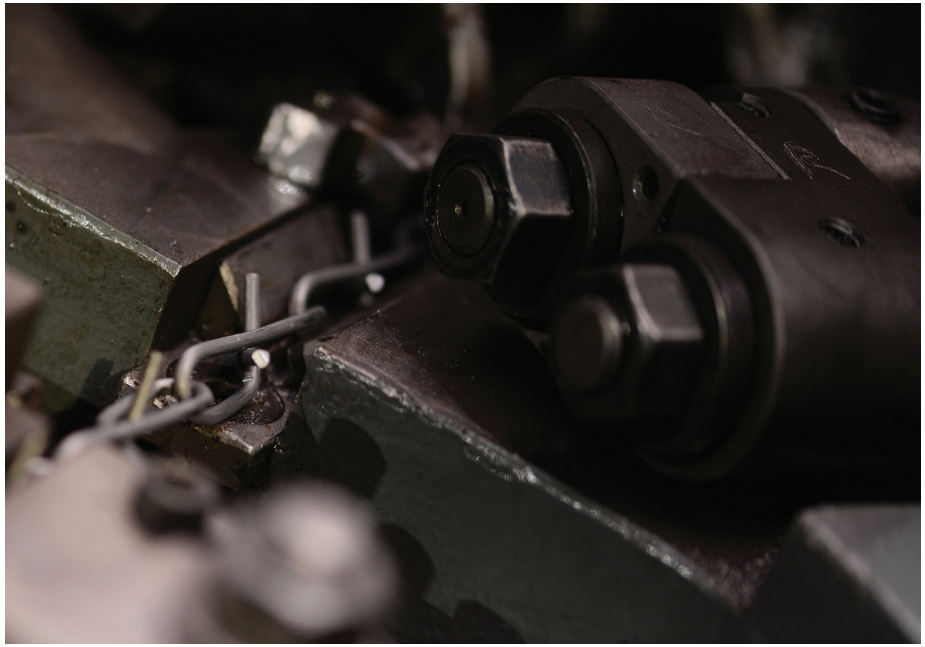

Technical Specifications

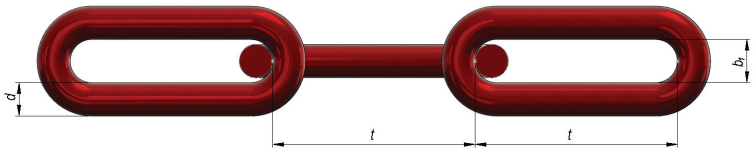

Force Chain Articel No.	Diameter Ø (d_n)	Colour	Inner Length t	Inside Width b_1	Outside Width b_2	Approximate Kg / Mtr
FC.PL.R.06.RW	6	Red-White	42	10,5	22,5	0,050
FC.PL.R.06.YB	6	Yellow-Black	42	10,5	22,5	0,050
FC.PL.R.06.B	6	Black	42	10,5	22,5	0,050
FC.PL.R.08.RW	8	Red-White	50	12,0	28,0	0,081
FC.PL.R.08.YB	8	Yellow-Black	50	12,0	28,0	0,081
FC.PL.R.08.B	8	Black	50	12,0	28,0	0,081
FC.PL.R.10.RW	10	Red-White	62	13,5	33,5	0,141
FC.PL.R.10.YB	10	Yellow-Black	62	13,5	33,5	0,141
FC.PL.R.10.B	10	Black	62	13,5	33,5	0,141


FORCE

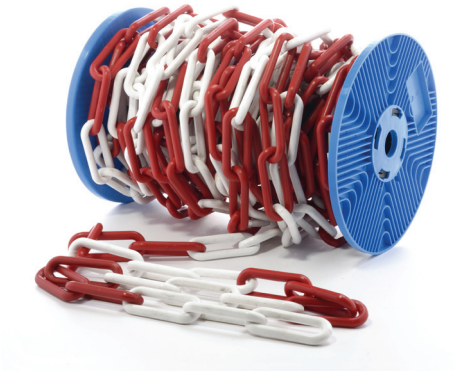


FORCE
CHAIN

Technical Specifications

ALLOY STEEL

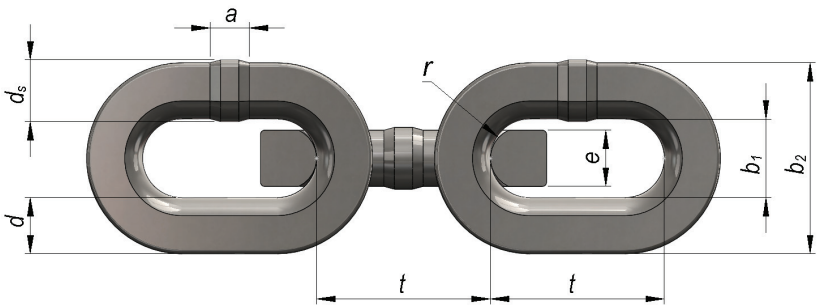

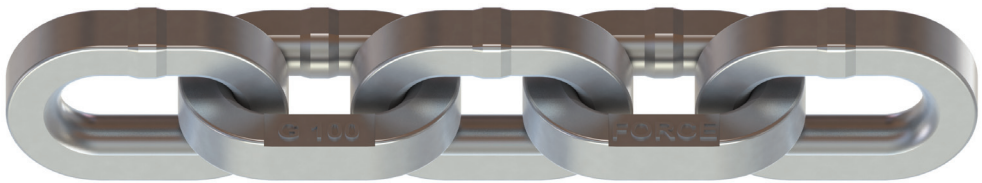

Force Chain	Wire Diameter			Inner Length		Inside Width	Outside Width	Approximate
Articel No.	D (d_n)	Tolerance	t	Tolerance		b_1 min.	b_2 max.	Kg / Mtr
FC.FR.G10.D.07.EP	[7 x 7]	± 0,20	24	+ 0,2	- 0,2	11,5	27,0	1,16
FC.FR.G10.D.08.EP	[8 x 8]	± 0,20	28	+ 0,3	- 0,3	12,5	30,0	1,80

Wire Diameter	Tensile Force	Test Force	Breaking Load	Bending Test
D (d_n) mm	(kN) max.	MTF (kN)	BLL (kN) min.	f (mm) min.
[7 x 7]	40	60,0	80,0	5,6
[8 x 8]	60	90,0	120,0	6,4

Security Level	1 / 1,5 / 2,0
Tensile Force (TF)	500 N/mm²
Manufacture Test Force (MTF)	750 N/mm²
Breaking Load Limit (BLL)	1000 N/mm²

Technical Specifications

ALLOY STEEL

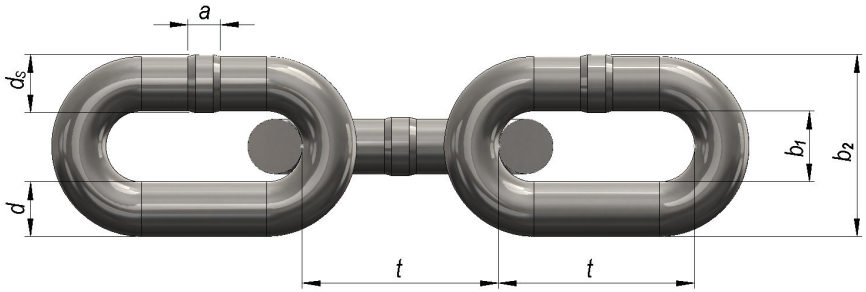

Force Chain	Wire Diameter		Inner Length		Inside Width	Outside Width	Approximate
Articel No.	Ø (d_n)	Tolerance	t	Tolerance	b_1 min.	b_2 max.	Kg / Mtr
FC.FR.G10.R.06.EP	6	± 0,24	18	± 0,5	7,8	22,2	0,80
FC.FR.G10.R.07.EP	7	± 0,28	21	± 0,6	9,1	25,9	1,10
FC.FR.G10.R.08.EP	8	± 0,32	24	± 0,7	10,4	29,6	1,40
FC.FR.G10.R.10.EP	10	± 0,40	30	± 0,9	13,0	37,0	2,20

Wire Diameter Ø (dn)	Tensile Force (kN) max.	Test Force MTF (kN)	Breaking Load BLL (kN) min.	Bending Test f (mm) min.
6	28,5	43,0	57,0	4,8
7	38,5	58,0	77,0	5,6
8	50,5	76,0	101,0	6,4
10	78,5	118,0	157,0	8,0

Security Level	1 / 1,5 / 2,0
Tensile Force (TF)	500 N/mm²
Manufacture Test Force (MTF)	750 N/mm²
Breaking Load Limit (BLL)	1000 N/mm²

Technical Specifications

ALLOY STEEL

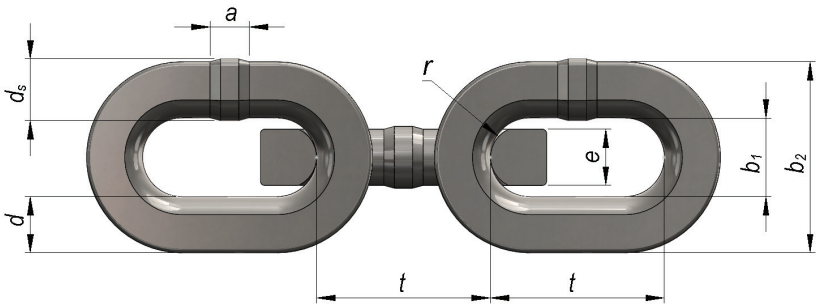

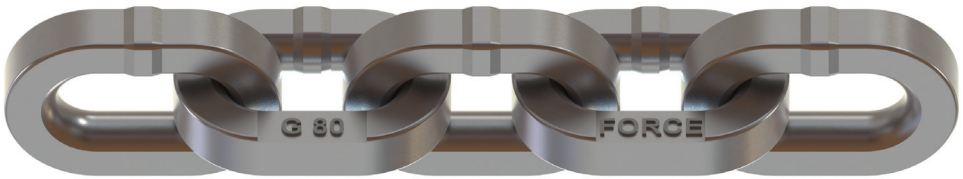

Force Chain Articel No.	Wire Diameter D (d_n)	Tolerance	t	Inner Length Tolerance		Inside Width b_1 min.	Outside Width b_2 max.	Approximate Kg / Mtr
FC.FR.G8.D.07.EP	[7 x 7]	± 0,20	24	+ 0,2	- 0,2	11,5	27,0	1,16
FC.FR.G8.D.08.EP	[8 x 8]	± 0,20	28	+ 0,3	- 0,3	12,5	30,0	1,80

Wire Diameter D (d_n) mm	Tensile Force (kN) max.	Test Force MTF (kN)	Breaking Load BLL (kN) min.	Bending Test f(mm) min.
[7 x 7]	35	53,0	70,0	5,6
[8 x 8]	45	68,0	90,0	6,4

Security Level	1 / 1,5 / 2,0
Tensile Force (TF)	400 N/mm²
Manufacture Test Force (MTF)	600 N/mm²
Breaking Load Limit (BLL)	800 N/mm²

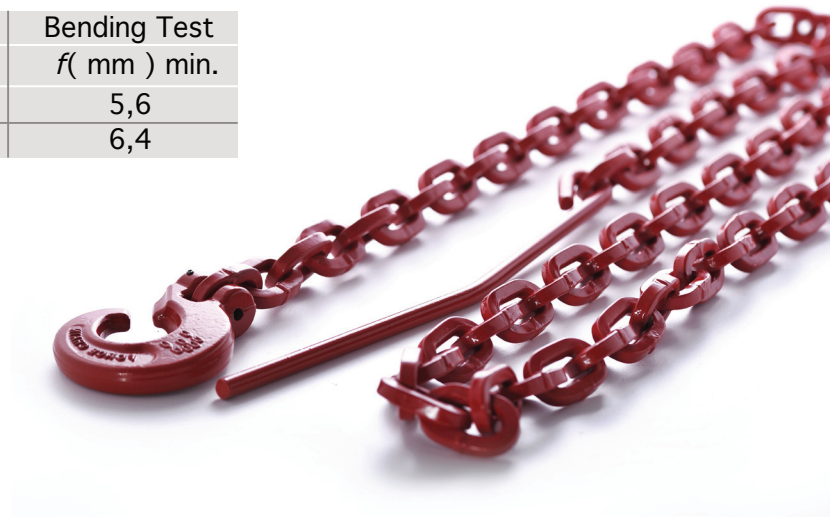

Technical Specifications

ALLOY STEEL

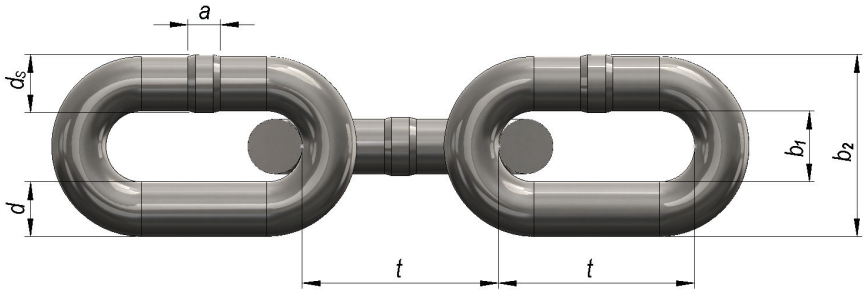

Force Chain	Wire Diameter		Inner Length		Inside Width	Outside Width	Approximate
Articel No.	Ø (d_n)	Tolerance	t	Tolerance	b_1 min.	b_2 max.	Kg / Mtr
FC.FR.G8.R.06.EP	6	± 0,24	18	± 0,5	7,8	22,2	0,80
FC.FR.G8.R.07.EP	7	± 0,28	21	± 0,6	9,1	25,9	1,10
FC.FR.G8.R.08.EP	8	± 0,32	24	± 0,7	10,4	29,6	1,40
FC.FR.G8.R.10.EP	10	± 0,40	30	± 0,9	13,0	37,0	2,20

Wire Diameter	Tensile Force	Test Force	Breaking Load	Bending Test
Ø (dn)	(kN) max.	MTF (kN)	BLL (kN) min.	f (mm) min.
6	22	33,0	45,2	4,8
7	30	45,0	61,6	5,6
8	40	60,0	80,4	6,4
10	63	95,0	126,0	8,0

Security Level	1 / 1,5 / 2,0
Tensile Force (TF)	400 N/mm²
Manufacture Test Force (MTF)	600 N/mm²
Breaking Load Limit (BLL)	800 N/mm²

Technical Specifications

ALLOY STEEL

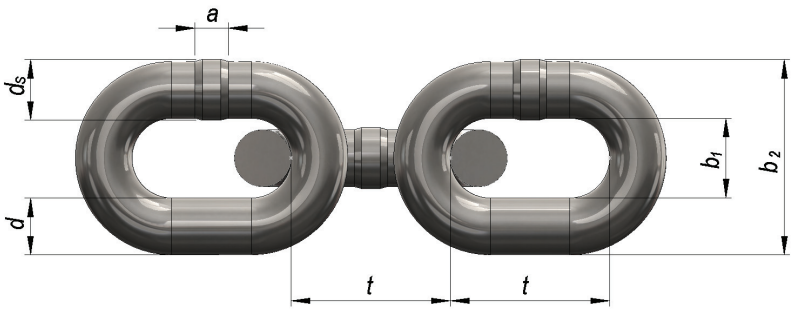

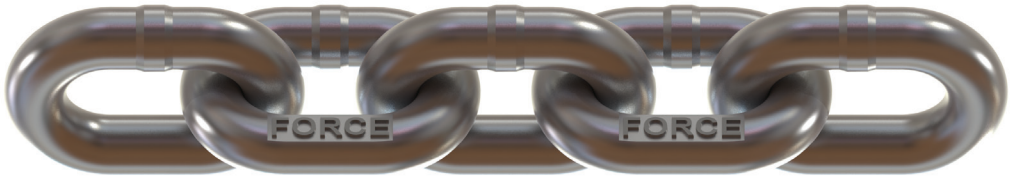

Force Chain	Wire Diameter		Inner Length			Inside Width	Outside Width	Inner Length (11 x t)			Approximate
Articel No.	Ø (d_n)	Tolerance	t	Tolerance		b_1 min.	b_2 max.	11 x t	Tolerance		Kg / Mtr
FC.PPC.G5.R.08.E	8	± 0,05	25,4	+ 0,1	- 0,1	9,4	26,6	279,4	+ 1,1	- 0,4	1,35

Surface Hardness : 800 HV10 Minimum
Hardness Depth : 0,07 x d (wire diameter) = 0,56 mm
Limit Hardness : 550 HV1

Electro Galvanizing : 25 Micron for longer corrosion resistant in Food Procesing Plants


CUFI
FORCE
CHAIN
ÇUKUROVA
FORCE

Technical Specifications

CARBON STEEL

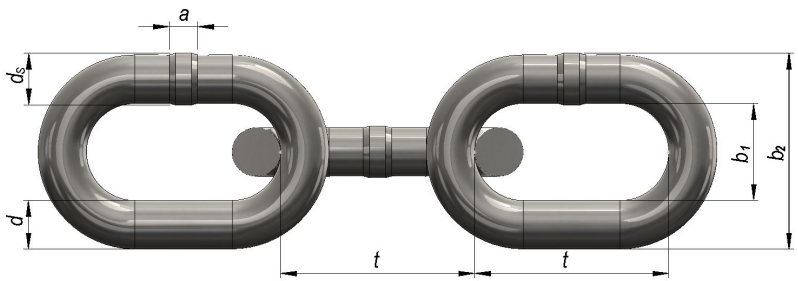

Force Chain	Wire Diameter			Inner Length		Inside Width	Outside Width	Inner Length (11 x t)			Approximate
Articel No.	Ø (d_n)	Tolerance	t	Tolerance		b_1 min.	b_2 max.	11 x t	Tolerance		Kg / Mtr
FC.HCH.DG3.R.05.24.E	5	± 0,20	24	+ 0,5	- 0,5	6,92	17,88	264,0	+ 1,0	- 1,0	0,483
FC.HCH.DG3.R.05.22.E	5	± 0,50	22	+ 0,5	- 0,5	6,60	17,50	242,0	+ 0,7	- 0,7	0,470
FC.HCH.DG3.R.05.252.E	5	± 0,20	25,2	+ 0,7	- 0,5	6,60	17,40	277,2	+ 2,5	- 0,8	0,452
FC.HCH.DG3.R.05.25.E	5	± 0,50	25	+ 0,5	- 0,5	8,00	18,90	275,0	+ 0,7	- 0,7	0,460
FC.HCH.DG3.R.05.225.E	5	± 0,10	22,5	+ 0,8	- 0,2	6,30	17,50	247,5	+ 3,2	- 1,7	0,470
FC.HCH.DG3.R.05.235.E	5	± 0,20	23,5	+ 0,5	- 0,5	8,00	19,00	258,5	+ 1,5	- 0,5	0,470
FC.HCH.DG3.R.05.26.E	5	± 0,20	26	+ 0,7	- 0,5	6,60	17,40	286,0	+ 2,5	- 0,8	0,450
FC.HCH.DG3.R.055.235.E	5,5	± 0,22	23,5	+ 0,5	- 0,5	7,00	20,00	258,5	+ 1,2	- 1,2	0,570
FC.HCH.DG3.R.06.27.E	6	± 0,10	27	+ 0,5	- 0,5	8,90	21,50	297,0	+ 1,5	- 0,0	0,680
FC.HCH.DG3.R.065.185.E	6,5	± 0,10	18,5	+ 0,2	- 0,1	8,00	21,80	203,5	+ 0,7	- 0,5	0,950

Security Level	1 / 2,5 / 4,0
Working Load Limit (WLL)	75 N/mm²
Manufacture Test Force (MTF)	188 N/mm²
Breaking Load Limit (BLL)	300 N/mm²

Technical Specifications

ALLOY STEEL

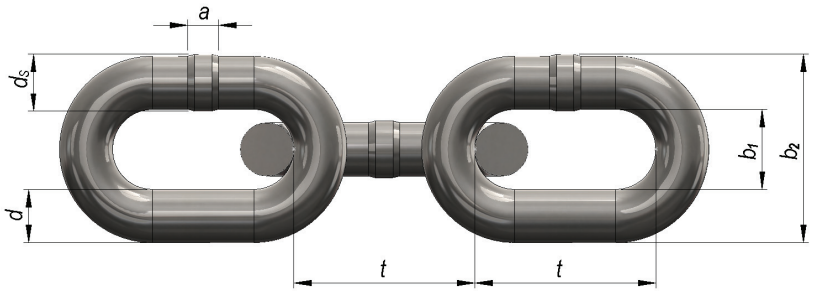

Force Chain	Wire Diameter Ø (dn)		Inside Length (Max.)		Inside Width Range	
Articel No.	in	mm	in	mm	in	mm
FC.NACM.G8.R.055.P	0,217 (7 / 32)	5,5	0,69	17,6	0,281 - 0,325	7,14 - 8,25
FC.NACM.G8.R.07.P	0,276 (9 / 32)	7,0	0,90	22,9	0,375 - 0,430	9,53 - 10,92
FC.NACM.G8.R.08.P	0,315 (5 / 16)	8,0	1,04	26,4	0,430 - 0,500	10,92 - 12,70
FC.NACM.G8.R.10.P	0,394 (3 / 8)	10,0	1,26	32,0	0,512 - 0,600	13,00 - 15,20
FC.NACM.G8.R.13.P	0,512 (1 / 2)	13,0	1,64	41,6	0,688 - 0,768	17,48 - 19,50
FC.NACM.G8.R.16.P	0,630 (5 / 8)	16,0	2,02	51,2	0,812 - 0,945	20,63 - 24,00

Force Chain	Wire Diameter Ø (dn)		WLL (Max.)		Proof Test (Min.)		Breaking Force (Min.)	
Articel No.	in	mm	lbs	kg	lbs	kN	lbs	kN
FC.NACM.G8.R.055.P	0,217 (7 / 32)	5,5	2.100	970	4.200	19,0	8.400	38,0
FC.NACM.G8.R.07.P	0,276 (9 / 32)	7,0	3.500	1.570	7.000	30,8	14.000	61,6
FC.NACM.G8.R.08.P	0,315 (5 / 16)	8,0	4.500	2.000	9.000	40,3	18.000	80,6
FC.NACM.G8.R.10.P	0,394 (3 / 8)	10,0	7.100	3.200	14.200	63,0	28.400	126,0
FC.NACM.G8.R.13.P	0,512 (1 / 2)	13,0	12.000	5.400	24.000	107,0	48.000	214,0
FC.NACM.G8.R.16.P	0,630 (5 / 8)	16,0	18.100	8.200	36.200	161,0	72.400	322,0

Technical Specifications

ALLOY STEEL

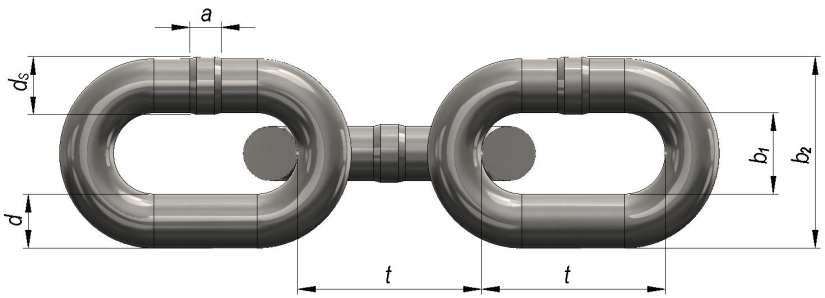

Force Chain	Wire Diameter Ø (dn)		Inside Length (Max.)		Inside Width Range	
Articel No.	in	mm	in	mm	in	mm
FC.NACM.G7.R.07.EY	0,281 (1 / 4)	7,0	1,24	31,5	0,38	9,8
FC.NACM.G7.R.087.EY	0,343 (5 / 16)	8,7	1,29	32,8	0,44	11,2
FC.NACM.G7.R.103.EY	0,406 (3 / 8)	10,3	1,38	35,0	0,55	14,0
FC.NACM.G7.R.119.EY	0,468 (7 / 16)	11,9	1,64	41,6	0,65	16,6
FC.NACM.G7.R.135.EY	0,531 (1 / 2)	13,5	1,79	45,5	0,72	18,2
FC.NACM.G7.R.160.EY	0,630 (5 / 8)	16,0	2,20	56,0	0,79	20,0

Force Chain	Wire Diameter Ø (dn)		WLL (Max.)		Proof Test (Min.)		Breaking Force (Min.)	
Articel No.	in	mm	lbs	kg	lbs	kN	lbs	kN
FC.NACM.G7.R.07.EY	0,281 (1 / 4)	7,0	3.150	1.430	6.300	28,0	12.600	56,1
FC.NACM.G7.R.087.EY	0,343 (5 / 16)	8,7	4.700	2.130	9.400	41,8	18.800	83,5
FC.NACM.G7.R.103.EY	0,406 (3 / 8)	10,3	6.600	2.990	13.200	58,6	26.400	117,3
FC.NACM.G7.R.119.EY	0,468 (7 / 16)	11,9	8.750	3.970	17.500	77,8	35.000	155,7
FC.NACM.G7.R.135.EY	0,531 (1 / 2)	13,5	11.300	5.130	22.600	100,6	45.200	201,2
FC.NACM.G7.R.160.EY	0,630 (5 / 8)	16,0	15.800	7.170	31.600	140,6	63.200	281,2

Technical Specifications

CARBON STEEL

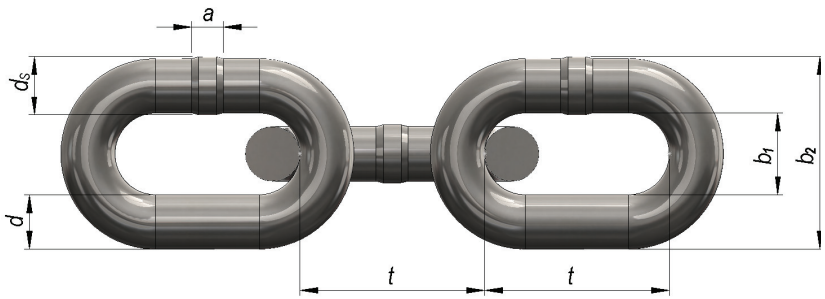

Force Chain	Wire Diameter Ø (dn)		Inside Length (Max.)		Inside Width Range	
Articel No.	in	mm	in	mm	in	mm
FC.NACM.G43.R.07.W	0,276 (1 / 4)	7,0	1,24	31,5	0,38	9,8
FC.NACM.G43.R.087.W	0,343 (5 / 16)	8,7	1,29	32,8	0,44	11,2
FC.NACM.G43.R.103.W	0,406 (3 / 8)	10,3	1,38	35,0	0,55	14,0
FC.NACM.G43.R.119.W	0,468 (7 / 16)	11,9	1,64	41,6	0,65	16,6
FC.NACM.G43.R.135.W	0,531 (1 / 2)	13,5	1,79	45,5	0,72	18,2
FC.NACM.G43.R.16.W	0,630 (5 / 8)	16,0	2,20	56,0	0,79	20,0

Force Chain	Wire Diameter Ø (dn)		WLL (Max.)		Proof Test (Min.)		Breaking Force (Min.)	
Articel No.	in	mm	lbs	kg	lbs	kN	lbs	kN
FC.NACM.G43.R.07.W	0,276 (1 / 4)	7,0	2.600	1.180	3.900	17,4	7.800	34,7
FC.NACM.G43.R.087.W	0,343 (5 / 16)	8,7	3.900	1.770	5.850	26,0	11.700	52,1
FC.NACM.G43.R.103.W	0,406 (3 / 8)	10,3	5.400	2.450	8.100	36,0	16.200	72,1
FC.NACM.G43.R.119.W	0,468 (7 / 16)	11,9	7.200	3.270	10.800	48,1	21.600	96,2
FC.NACM.G43.R.135.W	0,531 (1 / 2)	13,5	9.200	4.170	13.800	61,3	27.600	122,6
FC.NACM.G43.R.16.W	0,630 (5 / 8)	16,0	13.000	5.910	19.500	86,9	39.000	173,8

Technical Specifications

CARBON STEEL

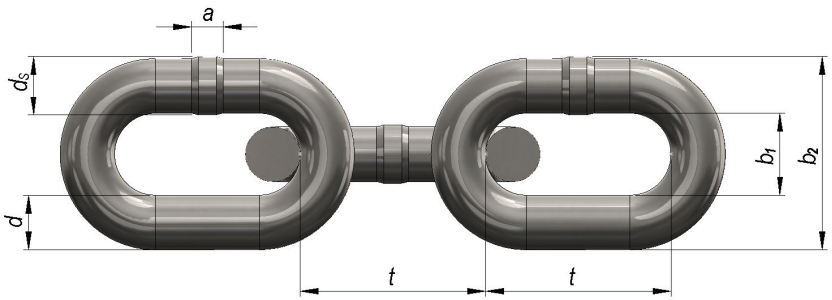

Force Chain	Wire Diameter Ø (dn)		Inside Length (Max.)		Inside Width Range	
Articel No.	in	mm	in	mm	in	mm
FC.NACM.G30.R.04.W	0,156 (1 / 8)	4,0	0,94	23,9	0,25	6,4
FC.NACM.G30.R.055.W	0,217 (3 / 16)	5,5	0,98	24,8	0,30	7,7
FC.NACM.G30.R.07.W	0,276 (1 / 4)	7,0	1,24	31,5	0,38	9,8
FC.NACM.G30.R.084.W	0,331 (5 / 16)	8,4	1,29	32,8	0,44	11,2
FC.NACM.G30.R.10.W	0,394 (3 / 8)	10,0	1,38	35,0	0,55	14,0
FC.NACM.G30.R.119.W	0,488 (7 / 16)	11,9	1,64	41,6	0,65	16,6
FC.NACM.G30.R.13.W	0,512 (1 / 2)	13,0	1,79	45,5	0,72	18,2
FC.NACM.G30.R.16.W	0,630 (5 / 8)	16,0	2,20	56,0	0,79	20,0

Force Chain	Wire Diameter Ø (dn)		WLL (Max.)		Proof Test (Min.)		Breaking Force (Min.)	
Articel No.	in	mm	lbs	kg	lbs	kN	lbs	kN
FC.NACM.G30.R.04.W	0,156 (1 / 8)	4,0	400	180	800	3,5	1.600	7,1
FC.NACM.G30.R.055.W	0,217 (3 / 16)	5,5	800	365	1.600	7,2	3.200	14,3
FC.NACM.G30.R.07.W	0,276 (1 / 4)	7,0	1.300	580	2.600	11,4	5.200	22,7
FC.NACM.G30.R.084.W	0,331 (5 / 16)	8,4	1.900	860	3.800	16,9	7.600	33,7
FC.NACM.G30.R.10.W	0,394 (3 / 8)	10,0	2.650	1.200	5.300	23,5	10.600	47,1
FC.NACM.G30.R.119.W	0,488 (7 / 16)	11,9	3.700	1.680	7.400	32,9	14.800	65,9
FC.NACM.G30.R.13.W	0,512 (1 / 2)	13,0	4.500	2.030	9.000	39,8	18.000	79,6
FC.NACM.G30.R.16.W	0,630 (5 / 8)	16,0	6.900	3.130	13.800	61,4	27.600	122,7

Technical Specifications

ALLOY STEEL

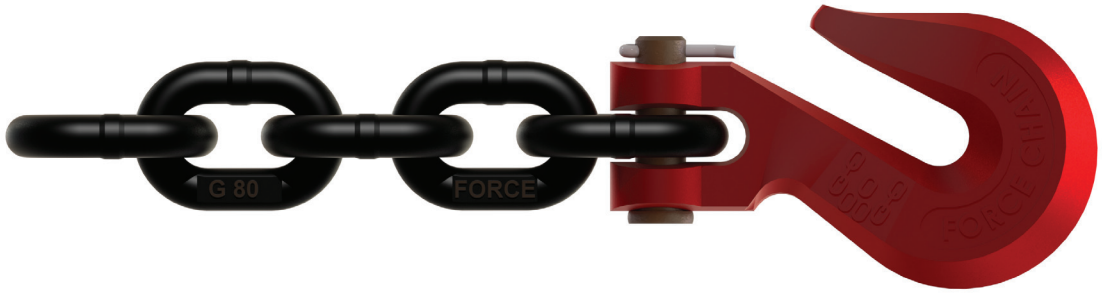

Force Chain	G80 Chain Diameter		Length		
Articel No.	Ø (d_n) mm	Ø (d_n) Inch	Mtr.	Feet	WLL (t)
FC.CGH.BC.F10.G8.10.P	10	3/8	3,05	10	3,25
FC.CGH.BC.F14.G8.10.P	10	3/8	4,30	14	3,25
FC.CGH.BC.F16.G8.10.P	10	3/8	4,90	16	3,25
FC.CGH.BC.F20.G8.10.P	10	3/8	6,10	20	3,25
FC.CGH.BC.F25.G8.10.P	10	3/8	7,60	25	3,25
FC.CGH.BC.F10.G8.13.P	13	1/2	3,05	10	5,60
FC.CGH.BC.F14.G8.13.P	13	1/2	4,30	14	5,60
FC.CGH.BC.F16.G8.13.P	13	1/2	4,90	16	5,60
FC.CGH.BC.F20.G8.13.P	13	1/2	6,10	20	5,60
FC.CGH.BC.F25.G8.13.P	13	1/2	7,60	25	5,60


FORCE
CHAIN

Technical Specifications

ALLOY STEEL

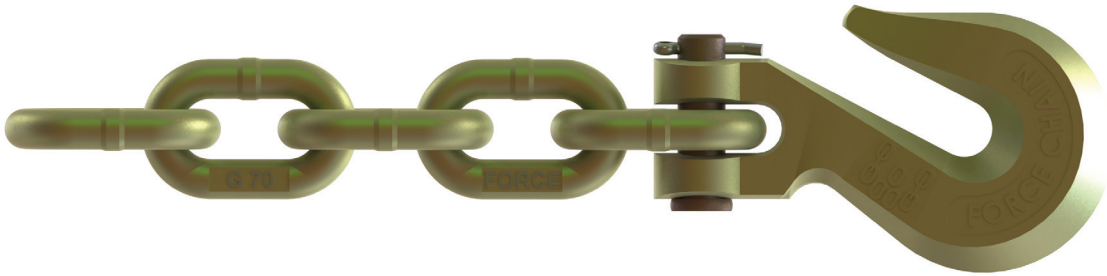

Force Chain	G70 Chain Diameter		Length		
Articel No.	Ø (d_n) mm	Ø (d_n) Inch	Mtr.	Feet	WLL (t)
FC.CGH.BC.F10.G7.08.P	8	5/16	3,05	10	2,13
FC.CGH.BC.F14.G7.08.P	8	5/16	4,30	14	2,13
FC.CGH.BC.F16.G7.08.P	8	5/16	4,90	16	2,13
FC.CGH.BC.F20.G7.08.P	8	5/16	6,10	20	2,13
FC.CGH.BC.F25.G7.08.P	8	5/16	7,60	25	2,13
FC.CGH.BC.F10.G7.10.P	10	3/8	3,05	10	2,99
FC.CGH.BC.F14.G7.10.P	10	3/8	4,30	14	2,99
FC.CGH.BC.F16.G7.10.P	10	3/8	4,90	16	2,99
FC.CGH.BC.F20.G7.10.P	10	3/8	6,10	20	2,99
FC.CGH.BC.F25.G7.10.P	10	3/8	7,60	25	2,99
FC.CGH.BC.F10.G7.13.P	13	1/2	3,05	10	5,13
FC.CGH.BC.F14.G7.13.P	13	1/2	4,30	14	5,13
FC.CGH.BC.F16.G7.13.P	13	1/2	4,90	16	5,13
FC.CGH.BC.F20.G7.13.P	13	1/2	6,10	20	5,13
FC.CGH.BC.F25.G7.13.P	13	1/2	7,60	25	5,13

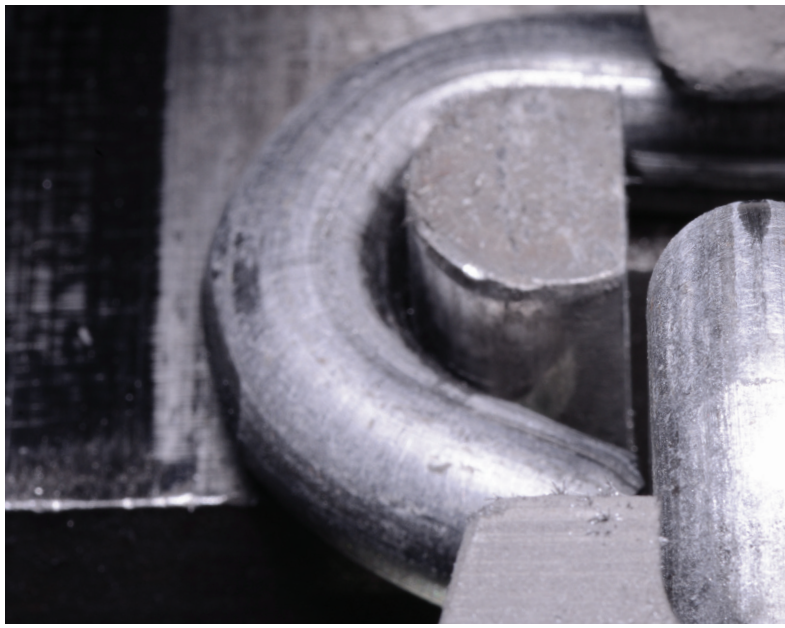

NACM Binder Chain - GRADE 43 - 430 N/mm²

Technical Specifications

CARBON STEEL

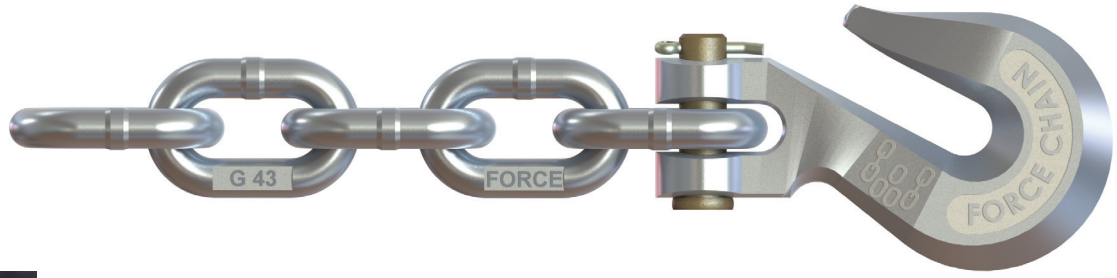

Force Chain	G43 Chain Diameter		Length		
Articel No.	Ø (d_n) mm	Ø (d_n) Inch	Mtr.	Feet	WLL (t)
FC.CGH.BC.F10.G4.08.P	8	5/16	3,05	10	1,77
FC.CGH.BC.F14.G4.08.P	8	5/16	4,30	14	1,77
FC.CGH.BC.F16.G4.08.P	8	5/16	4,90	16	1,77
FC.CGH.BC.F20.G4.08.P	8	5/16	6,10	20	1,77
FC.CGH.BC.F25.G4.08.P	8	5/16	7,60	25	1,77
FC.CGH.BC.F10.G4.10.P	10	3/8	3,05	10	2,45
FC.CGH.BC.F14.G4.10.P	10	3/8	4,30	14	2,45
FC.CGH.BC.F16.G4.10.P	10	3/8	4,90	16	2,45
FC.CGH.BC.F20.G4.10.P	10	3/8	6,10	20	2,45
FC.CGH.BC.F25.G4.10.P	10	3/8	7,60	25	2,45
FC.CGH.BC.F10.G4.13.P	13	1/2	3,05	10	4,17
FC.CGH.BC.F14.G4.13.P	13	1/2	4,30	14	4,17
FC.CGH.BC.F16.G4.13.P	13	1/2	4,90	16	4,17
FC.CGH.BC.F20.G4.13.P	13	1/2	6,10	20	4,17
FC.CGH.BC.F25.G4.13.P	13	1/2	7,60	25	4,17

Technical Specifications

ALLOY STEEL

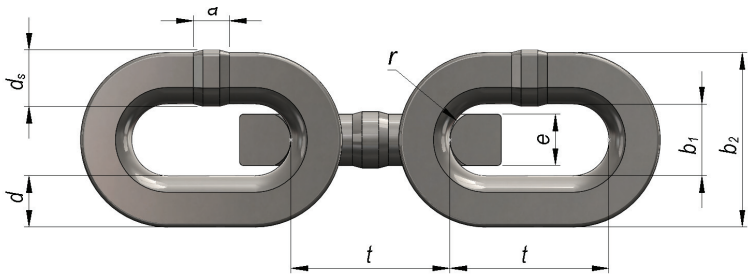

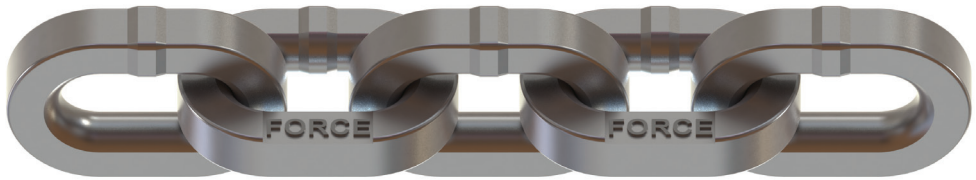

Force Chain	Wire Diameter				Inner Length		Inside Width	Outside Width	Inner Length (11 x t)		
Articel No.	D (d_n)	e (d_n)	Tolerance	t	Tolerance		b_1 min.	b_2 max.	11 x t	Tolerance	
FC.SC.D.03.165.N	3	3	± 0,10	16,5	+ 0,3	- 0,2	6,0	13,0	181,5	+ 1,0	- 1,0
FC.SC.D.035.158.N	3,5	3,5	± 0,10	15,8	+ 0,3	- 0,2	6,2	14,2	173,8	+ 1,0	- 1,0
FC.SC.D.035.165.N	3,5	3,5	± 0,10	16,5	+ 0,3	- 0,2	6,5	14,5	181,5	+ 1,0	- 1,0
FC.SC.D.045.165.N	4,5	4,5	± 0,10	16,5	+ 0,3	- 0,2	7,0	17,0	181,5	+ 1,0	- 1,0
FC.SC.D.045.20.N	4,5	4,5	± 0,10	20	+ 0,3	- 0,2	9,0	19,0	220,0	+ 1,0	- 1,0
FC.SC.D.05.45.N	5	5	± 0,10	45	+ 0,4	- 0,3	11,0	22,5	495,0	+ 1,7	- 1,2
FC.SC.D.055.195.N	5,5	5,5	± 0,10	19,5	+ 0,4	- 0,3	8,0	20,5	214,5	+ 1,0	- 1,0
FC.SC.D.055.20.N	5,5	5,5	± 0,10	20	+ 0,4	- 0,3	9,0	21,5	220,0	+ 1,0	- 1,0
FC.SC.D.06.28.N	6	6	± 0,10	28	+ 0,4	- 0,3	11,0	24,5	308,0	+ 1,0	- 1,0
FC.SC.D.06.50.N	6	6	± 0,10	50	+ 0,4	- 0,3	15,0	28,5	550,0	+ 2,0	- 2,0
FC.SC.D.07.24.N	7	7	± 0,15	24	+ 0,4	- 0,3	11,0	26,5	264,0	+ 1,0	- 1,0
FC.SC.D.07.245.N	7	7	± 0,15	24,5	+ 0,4	- 0,3	11,5	27,5	269,5	+ 1,0	- 1,0
FC.SC.D.07.25.N	7	7	± 0,15	25	+ 0,4	- 0,3	11,5	27,5	275,0	+ 1,0	- 1,0
FC.SC.D.07.28.N	7	7	± 0,15	28	+ 0,4	- 0,3	12,0	27,5	308,0	+ 1,0	- 1,0
FC.SC.D.08.28.N	8	8	± 0,15	28	+ 0,4	- 0,3	12,0	30,0	308,0	+ 1,0	- 1,0
FC.SC.D.08.32.N	8	8	± 0,15	32	+ 0,4	- 0,3	14,0	32,0	352,0	+ 1,0	- 1,0
FC.SC.D.08.34.N	8	8	± 0,15	34	+ 0,4	- 0,3	14,0	32,0	374,0	+ 1,1	- 1,1
FC.SC.D.09.36.N	9	10	± 0,15	36	+ 0,4	- 0,3	13,5	35,5	397,0	+ 1,2	- 1,2
FC.SC.D.095.35.N	9,5	9,5	± 0,15	35	+ 0,4	- 0,3	14,0	35,0	385,0	+ 2,0	- 1,0
FC.SC.D.10.30.N	10	10	± 0,15	30	+ 0,4	- 0,3	14,0	36,0	330,0	+ 1,0	- 1,0
FC.SC.D.10.40.N	10	10	± 0,15	40	+ 0,4	- 0,3	18,0	40,0	440,0	+ 1,5	- 1,5

Hardness Options

Option 1 (Case Hardened) According to ÖNORM V5117 and V5119
– Core hardness: (400 ± 100) HV5;
– Surface hardness: (850 ± 100) HV5;
– Hardness depth: 0.05 d to 0.1 d (limit hardness: 550 HV1) where d is the thickness of the chain link wire.

Option 2 (True Hardened)
– Surface and Core Hardness is same : 40 HRC (± –2 HRC)
– Much Longer Life and Breaking Strength

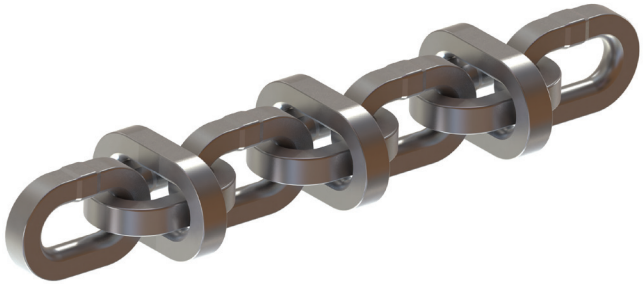

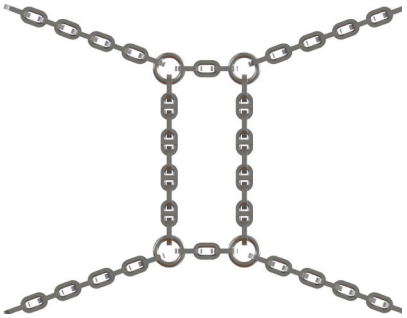

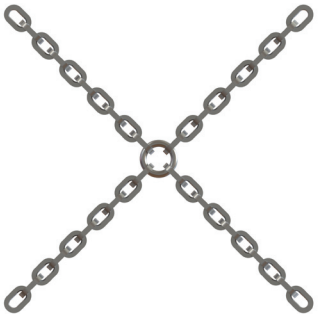

Technical Specifications

ALLOY STEEL

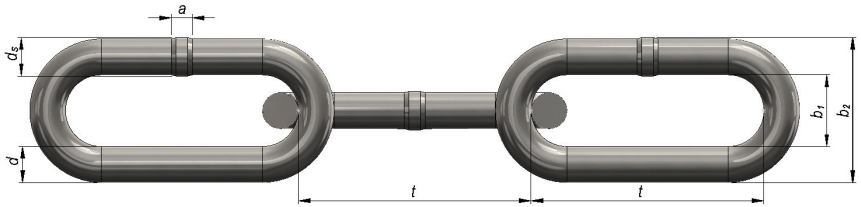

Force Chain	Wire Diameter			Inner Length		Inside Width	Bending Test	Approximate
Articel No.	Ø (d_n)	Tolerance	t	Tolerance		b_1 min.	f (mm) min.	Kg / Mtr
FC.SC.G65.R.035.E	3,5	± 0,20	28	+ 1,4	- 1,4	6,0	2,8	0,20
FC.SC.G65.R.04.E	4	± 0,20	32	+ 1,6	- 1,6	7,0	3,2	0,26
FC.SC.G65.R.05.E	5	± 0,30	35	+ 1,8	- 1,8	9,0	4,0	0,42
FC.SC.G65.R.06.E	6	± 0,30	42	+ 2,1	- 2,1	11,0	4,8	0,61
FC.SC.G65.R.07.E	7	± 0,40	49	+ 2,5	- 2,5	12,0	5,6	0,82
FC.SC.G65.R.08.E	8	± 0,40	52	+ 2,6	- 2,6	14,0	6,4	1,10
FC.SC.G65.R.10.E	10	± 0,50	65	+ 3,3	- 3,3	18,0	8,0	1,70
FC.SC.G65.R.13.E	13	± 0,70	82	+ 4,1	- 4,1	23,0	10,4	2,90

Security Level	1 / 2,5 / 4
Working Load Limit (WLL)	163 N/mm²
Manufacture Test Force (MTF)	410 N/mm²
Breaking Load Limit (BLL)	650 N/mm²
Elongation at Breaking Load (Min. %)	15

Technical Specifications

CARBON STEEL

Force Chain	Wire Diameter			Inner Length		Inside Width	Bending Test	Approximate
Articel No.	Ø (d_n)	Tolerance	t	Tolerance		b_1 min.	f (mm) min.	Kg / Mtr
FC.SC.G30.R.035.E	3,5	± 0,20	28	+ 1,4	- 1,4	6,0	2,8	0,20
FC.SC.G30.R.04.E	4	± 0,20	32	+ 1,6	- 1,6	7,0	3,2	0,26
FC.SC.G30.R.05.E	5	± 0,30	35	+ 1,8	- 1,8	9,0	4,0	0,42
FC.SC.G30.R.06.E	6	± 0,30	42	+ 2,1	- 2,1	11,0	4,8	0,61
FC.SC.G30.R.07.E	7	± 0,40	49	+ 2,5	- 2,5	12,0	5,6	0,82
FC.SC.G30.R.08.E	8	± 0,40	52	+ 2,6	- 2,6	14,0	6,4	1,10
FC.SC.G30.R.10.E	10	± 0,50	65	+ 3,3	- 3,3	18,0	8,0	1,70
FC.SC.G30.R.13.E	13	± 0,70	82	+ 4,1	- 4,1	23,0	10,4	2,90

Security Level	1 / 2,5 / 4
Working Load Limit (WLL)	75 N/mm ²
Manufacture Test Force (MTF)	188 N/mm²
Breaking Load Limit (BLL)	300 N/mm²
Elongation at Breaking Load (Min. %)	15

Technical Specifications

CARBON STEEL

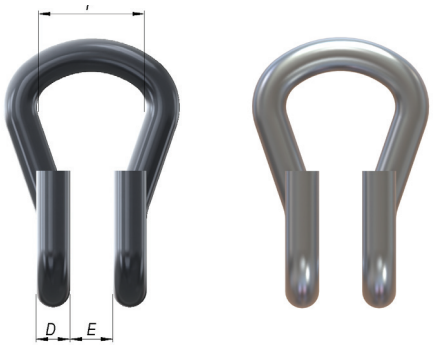

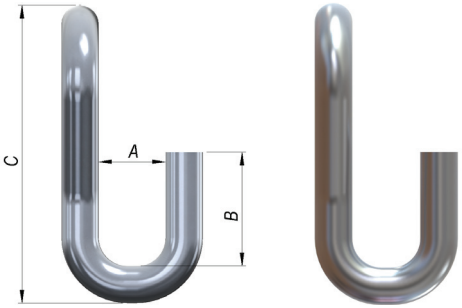

Force Chain	Wire Diameter											
Articel No.	Ø (D)	Tolerance	E	Tolerance	F	Tolerance	A	Tolerance	B	Tolerance	C	Tolerance
FC.SCH.R.045.W	4,5	± 0,10	5,5	± 0,50	14	± 0,50	11	± 0,75	20	± 1,00	32	± 0,10
FC.SCH.R.06.W	6	± 0,10	8	± 0,50	20	± 0,50	13,5	± 0,75	26	± 1,00	42,50	± 0,10
FC.SCH.R.065.W	6,5	± 0,10	8	± 0,50	21	± 0,50	16	± 0,75	22	± 1,00	46	± 0,10
FC.SCH.R.07.W	7	± 0,20	8	± 0,50	21,5	± 0,50	16	± 0,75	29	± 1,00	47,50	± 0,20
FC.SCH.R.085.W	8,5	± 0,20	10,5	± 0,50	25	± 0,50	16	± 0,75	38	± 1,00	60	± 0,20
FC.SCH.R.095.W	9,5	± 0,20	12	± 0,50	30	± 0,50	17	± 0,75	29	± 1,00	76	± 0,20

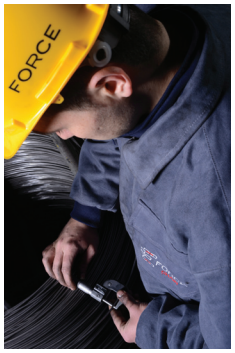

Technical Specifications

ALLOY STEEL

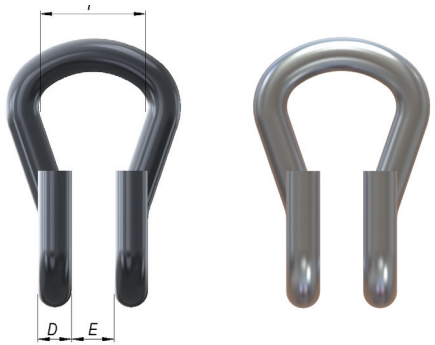

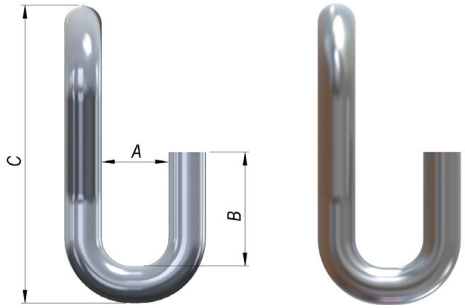

Force Chain	Wire Diameter											
Articel No.	Ø (D)	Tolerance	E	Tolerance	F	Tolerance	A	Tolerance	B	Tolerance	C	Tolerance
FC.SCH.R.045.W	4,5	± 0,10	5,5	± 0,50	14	± 0,50	11	± 0,75	20	± 1,00	32	± 0,10
FC.SCH.R.06.W	6	± 0,10	8	± 0,50	20	± 0,50	13,5	± 0,75	26	± 1,00	42,50	± 0,10
FC.SCH.R.065.W	6,5	± 0,10	8	± 0,50	21	± 0,50	16	± 0,75	22	± 1,00	46	± 0,10
FC.SCH.R.07.W	7	± 0,20	8	± 0,50	21,5	± 0,50	16	± 0,75	29	± 1,00	47,50	± 0,20
FC.SCH.R.085.W	8,5	± 0,20	10,5	± 0,50	25	± 0,50	16	± 0,75	38	± 1,00	60	± 0,20
FC.SCH.R.095.W	9,5	± 0,20	12	± 0,50	30	± 0,50	17	± 0,75	29	± 1,00	76	± 0,20

Technical Specifications

ALLOY STEEL

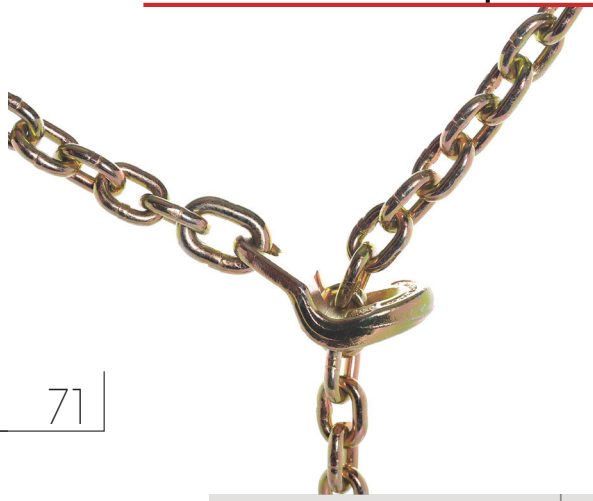

Force Chain Articel No.	G100 Chain Diameter Ø (d_n) mm	Length Mtr.	Working Load Limit WLL (t)	Test Force MTF (kN)	Breaking Load BLL (kN) min.
FC.TEGH.TDC.G10.07.YE	7	2,80	1,90	48,1	77,0
FC.TEGH.TDC.G10.07.YE	7	5,60	1,90	48,1	77,0
FC.TEGH.TDC.G10.08.YE	8	2,80	2,50	62,8	101,0
FC.TEGH.TDC.G10.08.YE	8	5,60	2,50	62,8	101,0
FC.TEGH.TDC.G10.10.YE	10	2,80	4,00	98,1	157,0
FC.TEGH.TDC.G10.10.YE	10	5,60	4,00	98,1	157,0
FC.TEGH.TDC.G10.13.YE	13	2,80	6,70	166,0	265,0
FC.TEGH.TDC.G10.13.YE	13	5,60	6,70	166,0	265,0

Tie Down Chain - GRADE 80 - 800 N/mm^2

Technical Specifications

ALLOY STEEL

Force Chain Articel No.	G80 Chain Diameter Ø (d_n) mm	Length Mtr.	Working Load Limit WLL (t)	Test Force MTF (kN)	Breaking Load BLL (kN) min.
FC.TEGH.TDC.G08.07.YE	7	2,80	1,50	38,5	61,6
FC.TEGH.TDC.G08.07.YE	7	5,60	1,50	38,5	61,6
FC.TEGH.TDC.G08.08.YE	8	2,80	2,00	50,3	80,4
FC.TEGH.TDC.G08.08.YE	8	5,60	2,00	50,3	80,4
FC.TEGH.TDC.G08.10.YE	10	2,80	3,15	78,5	126,0
FC.TEGH.TDC.G08.10.YE	10	5,60	3,15	78,5	126,0
FC.TEGH.TDC.G08.13.YE	13	2,80	5,30	133,0	212,0
FC.TEGH.TDC.G08.13.YE	13	5,60	5,30	133,0	212,0

Quality Control System

Calibration, Breaking, Bending, Fatique, Elongation, Hardness, Chemical

Heat Treathment

Annealing, Quenching, Tempering, Case Hardening

Surface Applications

Polishing, Sand Blasting, Electro - Galvanizing, Hot-Dip Galvanizing, Powder Coating, Wet Painting

Packaging

Continuous, Bundle, Reel, Wooden Box, Big-Bag, Euro Carton, Drum, Pail

EGINLIOGLU group

FORCE
CHAIN

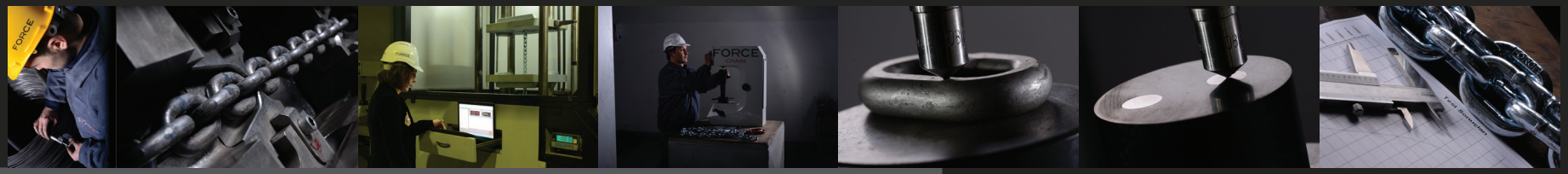

EGINLIOGLU
group

FORCE CHAIN

TECHNOLOGY

EXPERIENCE

BALANCE

QUALITY

HARMONY

DIVERSITY

EGINLIOGLU group

EGINLIOGLU

POWER

LEADERSHIP

TECHNIQUE

TARGET

EGINLIOGLU group

FORCE®

CHAIN

www.eginlioglu.com.tr | info@eginlioglu.com.tr

EGINLIOGLU
group

Eğinlioğlu Zincir Sanayi ve Ticaret
ISO 9001:2008 01 100 083448

Oğullar Metal San. Tic. Ltd. Şti.
ISO 9001:2008 01 100 083447

OSB 8 Cad. No: 10 Pk: 10100 Balıkesir / TÜRKIYE
Tel : +90 (266) 281 14 20 (Pbx) Fax : +90 (266) 281 14 26